engineering
mannesmann
Rexroth

BTV20.3

Project Planning Manual

SYSTEM200

DOK-MTC200-BTV20.3****-PR02-EN-P

Rexroth
Indramat

Title BTV20.3

Type of Documentation Project Planning Manual

Document Typecode DOK-MTC200-BTV20.3****-PR02-EN-P

Internal File Reference

- Document number: 120-1700-B348-02/EN

Purpose of Documentation This documentation describes …

- the hardware functions of the BTV20.3
- the connection and mounting
- the technical datas

Record of Revisions

Description	Release Date	Notes
120-1700-B348-01/EN	05/00	First issue
120-1700-B348-02/EN	11/00	Revision

Copyright © 2000 Rexroth Indramat GmbH

Copying this document, giving it to others and the use or communication of the contents thereof without express authority, are forbidden. Offenders are liable for the payment of damages. All rights are reserved in the event of the grant of a patent or the registration of a utility model or design (DIN 34-1).

Validity All rights are reserved with respect to the content of this documentation and the availability of the product.

Published by Rexroth Indramat GmbH
Bgm.-Dr.-Nebel-Str. 2 • D-97816 Lohr a. Main

Telephone 09352/40-0 • Tx 689421 • Fax 09352/40-4885

http://www.rexroth.com/indramat

Dept. ECH2 (FH/CV)

Note This document has been printed on chlorine-free bleached paper.

Contents

1 System Presentation

1.1 BTV20 – Brief Description

The BTV20 unit is a PC-based machine operator panel into which one or more NC controllers with PLC or one or more stand-alone PLC can be integrated. The number of modules that can be integrated depends on their configuration. Currently, there are 8 slots available.

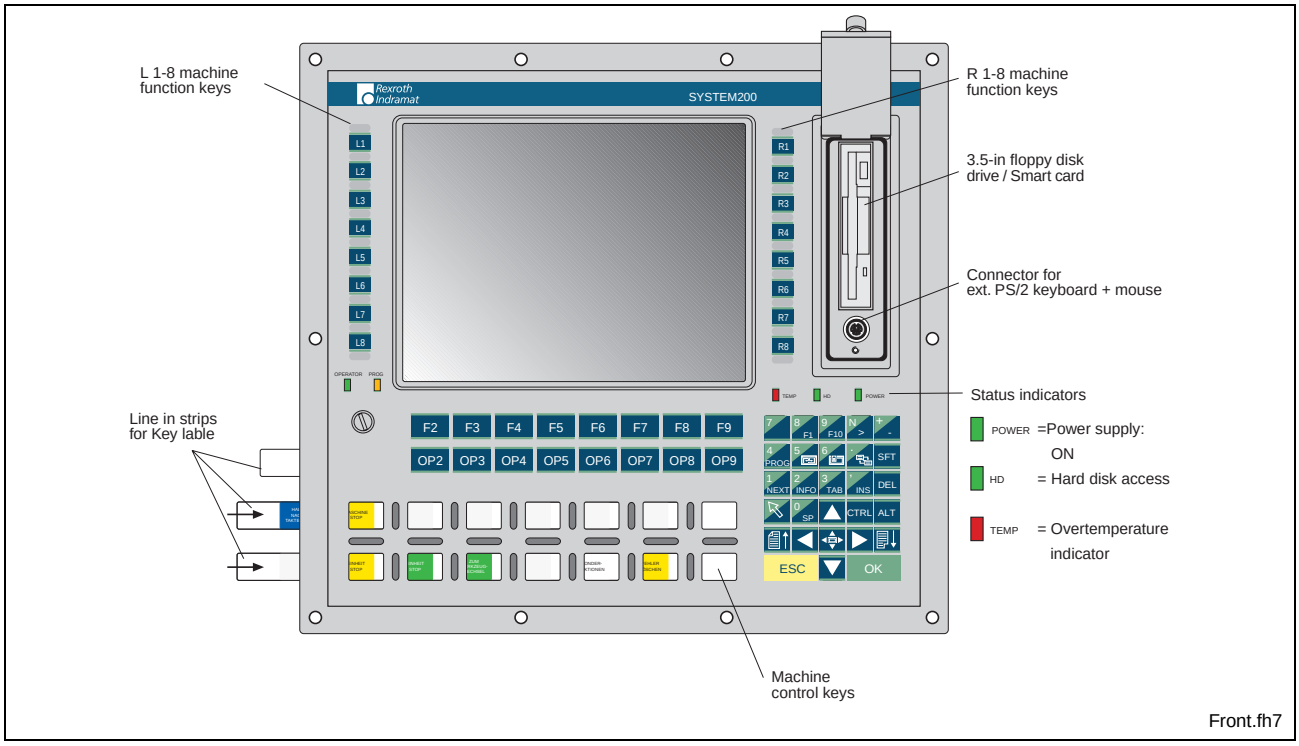

Fig. 1-1: BTV20 - Front panel

1.2 Exceptional Features of BTV20

The BTV20 provides a user-oriented function keyboard with the following features:

- 4mm aluminum front panel with tapered edges
- polyester foil with raised embossing which is let in holehedrally and resistant to chemicals
- protection (front) IP 65 (floppy drive cover closed)
- integrated machine keys with intermediate fillets to avoid double or unintentional operation
- key switch to lock safety functions

1.3 Standard Configuration of BTV20

- Pentium-SLOT-CPU min. 300 MHz with integrated graphic controller, 4 MB video memory and Ethernet connection
- 64 or 128 MB work memory (optional)
- min. 3 GB hard disk
- 3,5" disk drive
- 10,4" TFT color display
- Power supply 115 – 230 VAC or 24 VDC (optional)

1.4 Additional Modules

The following additional modules are currently available:

- Stand-alone PLC - module with INTERBUS-S or Profibus
- PLC module with INTERBUS-S or Profibus
- CNC module with SERCOS fiber optics interface
- 10 / 100 MBit Ethernet-Card PCM-E02.1

The configuration type code gives you all the currently available configurations (see side 10-2).

1.5 Firmware and Software Configurations

Operating system

- For license reasons, the BTV20.3 unit is only delivered with an installed operating system.
- In addition to the operating system, the user interface of an MTC200 CNC controller or an ISP200 PLC controller can also be pre-installed.

Windows NT

The following firmware configurations are currently available in conjunction with Windows-NT:

Firmware-Type	Installation der Software	Beschreibung
FWA-BTV203-WNT-01VRS-DE	SWA-PC*MS*-WNT-04VRS-DE-CD600	Windows NT 4.0 only, German
FWA-BTV203-WNT-19VRS-DE-GBO001	SWA-PC*MS*-WNT-04VRS-DE-CD600 SWA-MTC200-GBO-19VRS-MS-CD*FD-WIN*NT	Windows NT 4.0+GBO, German
FWA-BTV203-WNT-19VRS-DE-ISP001	SWA-PC*MS*-WNT-04VRS-DE-CD600 SWA-ISP200-PO*-19VRS-MS-CD*FD-WIN*NT	Windows NT 4.0+PO*, German
FWA-BTV203-WNT-19VRS-DE-HMI001	SWA-PC*MS*-WNT-04VRS-DE-CD600 SWA-MTC200-HMI-19VRS-MS-CD*FD	Windows NT 4.0+ GUI +HMI, German

FWA-BTV203-WNT-19VRS-DE-HMI002	SWA-PC*MS*-WNT-04VRS-DE-CD600 SWA-ISP200-HMI-19VRS-MS-CD*FD	Windows NT 4.0+PO*+HMI, German
FWA-BTV203-WNT-01VRS-EN	SWA-PC*MS*-WNT-04VRS-EN-CD600	Windows NT 4.0 only, English
FWA-BTV203-WNT-19VRS-EN-GBO001	SWA-PC*MS*-WNT-04VRS-EN-CD600 SWA-MTC200-GBO-19VRS-MS-CD*FD-WIN*NT	Windows NT 4.0+ GUI, English
FWA-BTV203-WNT-19VRS-EN-ISP001	SWA-PC*MS*-WNT-04VRS-EN-CD600 SWA-ISP200-PO*-19VRS-MS-CD*FD-WIN*NT	Windows NT 4.0+PO*, English
FWA-BTV203-WNT-19VRS-EN-HMI001	SWA-PC*MS*-WNT-04VRS-EN-CD600 SWA-MTC200-HMI-19VRS-MS-CD*FD	Windows NT 4.0+ GUI +HMI, English
FWA-BTV203-WNT-19VRS-EN-HMI002	SWA-PC*MS*-WNT-04VRS-EN-CD600 SWA-ISP200-HMI-19VRS-MS-CD*FD	Windows NT 4.0+PO*+HMI, English
FWA-BTV203-WNS-19VRS-DE-HMI001	SWA-PC*MS*-WNT-04VRS-DE-CD600-SERVER SWA-MTC200-HMI-19VRS-MS-CD*FD	Windows NT 4.0Server+ GUI +HMI, German
FWA-BTV203-WNS-19VRS-DE-HMI002	SWA-PC*MS*-WNT-04VRS-DE-CD600-SERVER SWA-ISP200-HMI-19VRS-MS-CD*FD	Windows NT 4.0Server+ PO*+HMI, German
FWA-BTV203-WNS-19VRS-EN-HMI001	SWA-PC*MS*-WNT-04VRS-EN-CD600-SERVER SWA-MTC200-HMI-19VRS-MS-CD*FD	Windows NT 4.0Server+ GUI +HMI, English
FWA-BTV203-WNS-19VRS-EN-HMI002	SWA-PC*MS*-WNT-04VRS-EN-CD600-SERVER SWA-ISP200-HMI-19VRS-MS-CD*FD	Windows NT4.0Server+ PO*+HMI, English

Fig. 1-2: Firmware configurations under Windows NT

Definition of terms

GUI Graphical user interface

PO* Programming interface

HMI Human Machine Interface – User interface for production machines

Note: The order of the FWA firmware merely contains the installation of the listed software. The SWA or SWL software products that are to be installed must be ordered separately.

SWA: Software package that contains the floppy disks (CD) and the description.

SWL: Software license that permits an existing software package to be used a second time.

2 Important directions for use

2.1 Appropriate use

Introduction

Rexroth Indramat products represent state-of-the-art developments and manufacturing. They are tested prior to delivery to ensure operating safety and reliability.

The products may only be used in the manner that is defined as appropriate. If they are used in an inappropriate manner, then situations can develop that may lead to property damage or injury to personnel.

Note: Rexroth Indramat, as manufacturer, is not liable for any damages resulting from inappropriate use. In such cases, the guarantee and the right to payment of damages resulting from inappropriate use are forfeited. The user alone carries all responsibility of the risks.

Before using Rexroth Indramat products, make sure that all the pre-requisites for appropriate use of the products are satisfied:

- Personnel that in any way, shape or form uses our products must first read and understand the relevant safety instructions and be familiar with appropriate use.
- If the product takes the form of hardware, then they must remain in their original state, in other words, no structural changes are permitted. It is not permitted to decompile software products or alter source codes.
- Do not mount damaged or faulty products or use them in operation.
- Make sure that the products have been installed in the manner described in the relevant documentation.

Areas of use and application

The BTV20.3 is a PC-based user and visualization terminal into which one or several NC controls with PLC or one or more stand-alone PLCs can be mounted. The BTV20.3 terminal made by Rexroth Indramat is designed for use in the following cases:

- as a user, visualization and programming terminal with integral control hardware in a stand-alone machine,
- as a user, visualization and programming terminal for connected RECO controls,

Note: The BTV20.3 may only be used with the accessories and parts specified in this document. If a component has not been specifically named, then it may not be either mounted or connected. The same applies to cables and lines.

Operation is only permitted in the specified configurations and combinations of components using the software and firmware as specified in the relevant function descriptions.

The machine user and visualization terminal is designed for control tasks in an installation with multiple axes.

Available for an application-specific use of the terminals are unit types with differing drive power and different interfaces.

Typical areas of application of a BTV20.3 are:

- Lathes
- Milling machines
- Machining centers.

The BTV20.3 may only be operated under the assembly, installation and ambient conditions as described here (temperature, system of protection, humidity, EMC requirements, etc.) and in the position specified.

2.2 Inappropriate use

Using the motors outside of the above-referenced areas of application or under operating conditions other than described in the document and the technical data specified is defined as “inappropriate use".

The terminals may not be used if

- they are subject to operating conditions that do not meet the above specified ambient conditions. This includes, for example, operation under water, in the case of extreme temperature fluctuations or extreme maximum temperatures or if
- Rexroth Indramat has not specifically released them for that intended purpose. Please note the specifications outlined in the general Safety Instructions!

3 Safety Instructions for Electric Servo Drives and Controls

3.1 Introduction

Read these instructions before the equipment is used and eliminate the risk of personal injury or property damage. Follow these safety instructions at all times.

Do not attempt to install, use or service this equipment without first reading all documentation provided with the product. Read and understand these safety instructions and all user documentation of the equipment prior to working with the equipment at any time. If you do not have the user documentation for your equipment contact your local Rexroth Indramat representative to send this documentation immediately to the person or persons responsible for the safe operation of this equipment.

If the product is resold, rented or transferred or passed on to others, then these safety instructions must be delivered with the product.

WARNING

Inappropriate use of this equipment, failure to follow the safety instructions in this document or tampering with the product, including disabling of safety devices, may result in product damage, personal injury, severe electrical shock or death!

3.2 Explanations

The safety warnings in this documentation describe individual degrees of hazard seriousness in compliance with ANSI:

Warning symbol with signal word	Degree of hazard seriousness The degree of hazard seriousness describes the consequences resulting from non-compliance with the safety guidelines.
DANGER	Bodily harm or product damage will occur.
WARNING	Death or severe bodily harm may occur.
CAUTION	Death or severe bodily harm may occur.

Fig. 3-1: Classes of danger with ANSI

3.3 Hazards by inappropriate use

DANGER	**High voltage and high discharge current! Danger to life, risk of severe electrical shock and risk of injury!**
DANGER	**Dangerous movements! Danger to life and risk of injury or equipment damage by unintentional motor movements!**
WARNING	**High electrical voltage due to wrong connections! Danger to life, severe electrical shock and severe bodily injury!**
WARNING	**Health hazard for persons with heart pacemakers, metal implants and hearing aids in proximity to electrical equipment!**
CAUTION	**Surface of machine housing could be extremely hot! Danger of injury! Danger of burns!**
CAUTION	**Risk of injury due to inappropriate handling! Bodily injury caused by crushing, shearing, cutting and mechanical shock or improper handling of pressurized systems!**
CAUTION	**Risk of injury due to inappropriate handling of batteries!**

3.4 General Information

- Rexroth Indramat GmbH is not liable for damages resulting from failure to observe the warnings given in these documentation.
- Order operating, maintenance and safety instructions in your language before starting up the machine. If you find that due to a translation error you can not completely understand the documentation for your product, please ask your supplier to clarify.
- Proper and correct transport, storage, assembly and installation as well as care in operation and maintenance are prerequisites for optimal and safe operation of this equipment.
- Trained and qualified personnel in electrical equipment:
  Only trained and qualified personnel may work on this equipment or within its proximity. Personnel are qualified if they have sufficient knowledge of the assembly, installation and operation of the product as well as an understanding of all warnings and precautionary measures noted in these instructions.
  Furthermore, they should be trained, instructed and qualified to switch electrical circuits and equipment on and off, to ground them and to mark them according to the requirements of safe work practices and common sense. They must have adequate safety equipment and be trained in first aid.
- Only use spare parts and accessories approved by the manufacturer.
- Follow all safety regulations and requirements for the specific application as practiced in the country of use.
- The equipment is designed for installation on commercial machinery.

European countries: see directive 89/392/EEC (machine guideline).

- The ambient conditions given in the product documentation must be observed.
- Use only safety features that are clearly and explicitly approved in the Project Planning manual.
  For example, the following areas of use are not allowed: Construction cranes, Elevators used for people or freight, Devices and vehicles to transport people, Medical applications, Refinery plants, the transport of hazardous goods, Radioactive or nuclear applications, Applications sensitive to high frequency, mining, food processing, Control of protection equipment (also in a machine).
- Start-up is only permitted once it is sure that the machine, in which the product is installed, complies with the requirements of national safety regulations and safety specifications of the application.
- Operation is only permitted if the national EMC regulations for the application are met.
  The instructions for installation in accordance with EMC requirements can be found in the INDRAMAT document "EMC in Drive and Control Systems”.
  The machine builder is responsible for compliance with the limiting values as prescribed in the national regulations and specific EMC regulations for the application.

European countries: see Directive 89/336/EEC (EMC Guideline).

U.S.A.: See National Electrical Codes (NEC), National Electrical Manufacturers Association (NEMA), and local building codes. The user of this equipment must consult the above noted items at all times.

- Technical data, connections and operational conditions are specified in the product documentation and must be followed at all times.

3.5 Protection against contact with electrical parts

Note: This section refers to equipment with voltages above 50 Volts.

Making contact with parts conducting voltages above 50 Volts could be dangerous to personnel and cause an electrical shock. When operating electrical equipment, it is unavoidable that some parts of the unit conduct dangerous voltages.

DANGER

High electrical voltage! Danger to life, severe electrical shock and severe bodily injury!

⇒ Only those trained and qualified to work with or on electrical equipment are permitted to operate, maintain or repair this equipment.

⇒ Follow general construction and safety regulations when working on electrical installations.

⇒ Before switching on power the ground wire must be permanently connected to all electrical units according to the connection diagram.

⇒ Do not operate electrical equipment at any time if the ground wire is not permanently connected, even for brief measurements or tests.

⇒ Before working with electrical parts with voltage potentials higher than 50 V, the equipment must be disconnected from the mains voltage or power supply.

⇒ The following should be observed with electrical drives, power supplies, and filter components:

Wait five (5) minutes after switching off power to allow capacitors to discharge before beginning work. Measure the voltage on the capacitors before beginning work to make sure that the equipment is safe to touch.

⇒ Never touch the electrical connection points of a component while power is turned on.

⇒ Install the covers and guards provided with the equipment properly before switching the equipment on. Prevent contact with live parts at any time.

⇒ A residual-current-operated protective device (r.c.d.) must not be used on an electric drive! Indirect contact must be prevented by other means, for example, by an overcurrent protective device.

⇒ Equipment that is built into machines must be secured against direct contact. Use appropriate housings, for example a control cabinet.

European countries: according to EN 50178/1998, section 5.3.2.3.

U.S.A: See National Electrical Codes (NEC), National Electrical Manufacturers Association (NEMA) and local building codes. The user of this equipment must observe the above noted instructions at all times.

To be observed with electrical drives, power supplies, and filter components:

DANGER

High electrical voltage! High leakage current! Danger to life, danger of injury and bodily harm from electrical shock!

⇒ Before switching on power for electrical units, all housings and motors must be permanently grounded according to the connection diagram. This applies even for brief tests.

⇒ Leakage current exceeds 3.5 mA. Therefore the electrical equipment and units must always be firmly connected to the supply network.

⇒ Use a copper conductor with at least 10 mm² cross section over its entire course for this protective connection!

⇒ Prior to startups, even for brief tests, always connect the protective conductor or connect with ground wire. High voltage levels can occur on the housing that could lead to severe electrical shock and personal injury.

European countries: EN 50178/1998, section 5.3.2.1.

USA: See National Electrical Codes (NEC), National Electrical Manufacturers Association (NEMA), and local building codes. The user of this equipment must maintain the above noted instructions at all times.

3.6 Protection by protective low voltage (PELV) against electrical shock

All connections and terminals with voltages between 5 and 50 Volts on INDRAMAT products are protective low voltages designed in accordance with the following standards on contact safety:

- International: IEC 364-4-411.1.5
- EU countries: see EN 50178/1998, section 5.2.8.1.

WARNING

High electrical voltage due to wrong connections! Danger to life, severe electrical shock and severe bodily injury!

⇒ Only equipment, electrical components and cables of the protective low voltage type (PELV = Protective Extra Low Voltage) may be connected to all terminals and clamps with 0 to 50 Volts.

⇒ Only safely isolated voltages and electrical circuits may be connected. Safe isolation is achieved, for example, with an isolating transformer, an opto-electronic coupler or when battery-operated.

3.7 Protection against dangerous movements

Dangerous movements can be caused by faulty control or the connected motors. These causes are be various such as:

- unclean or wrong wiring of cable connections
- inappropriate or wrong operation of equipment
- malfunction of sensors, encoders and monitoring circuits
- defective components
- software errors

Dangerous movements can occur immediately after equipment is switched on or even after an unspecified time of trouble-free operation.

The monitors in the drive components make faulty operation almost impossible. Regarding personnel safety, especially the danger of bodily harm and property damage, this alone should not be relied upon to ensure complete safety. Until the built-in monitors become active and effective, it must be assumed in any case that some faulty drive movements will occur. The extent of these faulty drive movements depends upon the type of control and the state of operation.

DANGER

Dangerous movements! Danger to life and risk of injury or equipment damage!

⇒ Personnel protection must be secured for the above listed reason by means of superordinate monitors or measures.

These are instituted in accordance with the specific situation of the facility and a danger and fault analysis conducted by the manufacturer of the facility. All the safety regulations that apply to this facility are included therein. By switching off, circumventing or if safety devices have simply not been activated, then random machine movements or other types of faults can occur.

Avoiding accidents, injury or property damage:

⇒ Keep free and clear of the machine's range of motion and moving parts. Prevent people from accidentally entering the machine's range of movement:

- use protective fences
- use protective railings
- install protective coverings
- install light curtains or light barriers

⇒ Fences must be strong enough to withstand maximum possible momentum.

⇒ Mount the emergency stop switch (E-stop) in the immediate reach of the operator. Verify that the emergency stop works before startup. Don't operate the machine if the emergency stop is not working.

⇒ Isolate the drive power connection by means of an emergency stop circuit or use a start-inhibit system to prevent unintentional start-up.

⇒ Make sure that the drives are brought to standstill before accessing or entering the danger zone.

⇒ Secure vertical axes against falling or slipping after switching off the motor power by, for example:

- Mechanically securing the vertical axes
- Adding an external brake / clamping mechanism
- Balancing and thus compensating for the vertical axes mass and the gravitational force

The standard equipment motor brake or an external brake controlled directly by the servo drive are not sufficient to guarantee the safety of personnel!

⇒ Disconnect electrical power to the equipment using a master switch and secure the switch against reconnection for:

- maintenance and repair work
- cleaning of equipment
- long periods of discontinued equipment use

⇒ Avoid operating high-frequency, remote control and radio equipment near electronics circuits and supply leads. If use of such equipment cannot be avoided, verify the system and the plant for possible malfunctions at all possible positions of normal use before the first start-up. If necessary, perform a special electromagnetic compatibility (EMC) test on the plant.

3.8 Protection against magnetic and electromagnetic fields during operations and mounting

Magnetic and electromagnetic fields generated by current-carrying conductors and permanent magnets in motors represent a serious health hazard to persons with heart pacemakers, metal implants and hearing aids.

WARNING

Health hazard for persons with heart pacemakers, metal implants and hearing aids in proximity to electrical equipment!

⇒ Persons with pacemakers, metal implants and hearing aids are not permitted to enter following areas:

- Areas in which electrical equipment and parts are mounted, being operated or started up.
- Areas in which parts of motors with permanent magnets are being stored, operated, repaired or mounted.

⇒ If it is necessary for a person with a pacemaker to enter such an area, then a physician must be consulted prior to doing so. Pacemaker, that are already implanted or will be implanted in the future, have a considerable deviation in their resistance to interference. Due to the unpredictable behavior there are no rules with general validity.

⇒ Persons with hearing aids, metal implants or metal pieces must consult a doctor before they enter the areas described above. Otherwise health hazards will occur.

3.9 Protection against contact with hot parts

CAUTION

Housing surfaces could be extremely hot!
Danger of injury! Danger of burns!

⇒ Do not touch surfaces near the source of heat! Danger of burns!

⇒ Wait ten (10) minutes before you access any hot unit. Allow the unit to cool down.

⇒ Do not touch hot parts of the equipment, such as housings, heatsinks or resistors. Danger of burns!

3.10 Protection during handling and installation

Under certain conditions unappropriate handling and installation of parts and components may cause injuries.

CAUTION

Risk of injury through incorrect handling!
Bodily harm caused by crushing, shearing, cutting and mechanical shock!

⇒ Observe general instructions and safety regulations during handling installation.

⇒ Use only appropriate lifting or moving equipment.

⇒ Take precautions to avoid pinching and crushing.

⇒ Use only appropriate tools. If specified by the product documentation, special tools must be used.

⇒ Use lifting devices and tools correctly and safely.

⇒ Wear appropriate protective clothing, e.g. safety glasses, safety shoes and safety gloves.

⇒ Never stay under suspended loads.

⇒ Clean up liquids from the floor immediately to prevent personnel from slipping.

3.11 Battery safety

Batteries contain reactive chemicals in a solid housing. Inappropriate handling may result in injuries or equipment damage.

CAUTION

Risk of injury through incorrect handling!

⇒ Do not attempt to reactivate discharged batteries by heating or other methods (danger of explosion and corrosion).

⇒ Never charge batteries (danger from leakage and explosion).

⇒ Never throw batteries into a fire.

⇒ Do not dismantle batteries.

⇒ Handle with care. Incorrect extraction or installation of a battery can damage equipment.

Note: Environmental protection and disposal! The batteries contained in the product should be considered as hazardous material for land, air and sea transport in the sense of the legal requirements (danger of explosion). Dispose batteries separately from other refuse. Observe the legal requirements given in the country of installation.

3.12 Protection against pressurized Systems

Certain Motors (ADS, ADM, 1MB etc.) and drives, corresponding to the information in the Project Planning manual, must be provided with and remain under a forced load such as compressed air, hydraulic oil, cooling fluid or coolant. In these cases, improper handling of the supply of the pressurized systems or connections of the fluid or air under pressure can lead to injuries or accidents.

CAUTION

Danger of injury when pressurized systems are handled by untrained personnel!

⇒ Do not attempt to disassemble, to open or to cut a pressurized system.

⇒ Observe the operation restrictions of the respective manufacturer.

⇒ Before the disassembly of pressurized systems, lower pressure and drain off the fluid or gas.

⇒ Use suitable protective clothing (for example protective eyewear, safety shoes and gloves)

⇒ Remove any fluid that has leaked out onto the floor immediately.

Note: Environmental protection and disposal! The fluids used in the operation of the pressurized system equipment is not environmentally compatible. Fluid that is damaging to the environment must be disposed of separate from normal waste. Observe the national specifications of the country of installation.

4 Front Panel, Keyboard

4.1 Floppy Disk Flap, Reset Button

Beneath the floppy disk flap there is a reset button, that can be reached using a thin object (ball pen, etc.), and the connector of the external keyboard. This connector can be used as a Service Interface, when no external keyboard PCK03 is available.

Note: Pressing the reset button terminates all open applications without saving them, and reboots the computer.

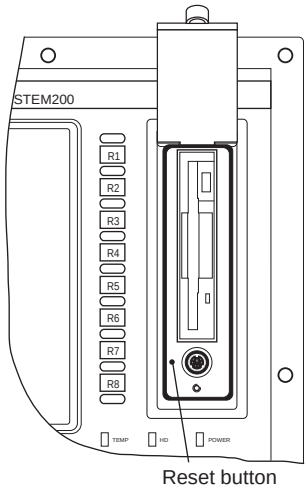

Fig. 4-1: Location of the reset button

Note: During floppy drive operation verify that the flap remains open. Closing of the flap can cause write and read errors.

4.2 Status Display

Beneath the floppy disk flap there are three LEDs with the following meanings:

Temp	Temperature monitoring
Power	ON as long as the BTV20 is switched on and fed with power
HDD	ON whenever there is an access to the hard disk

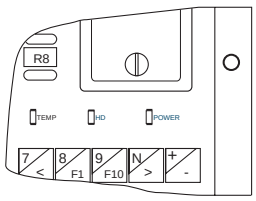

Fig. 4-2: Status displays

4.3 General Keys

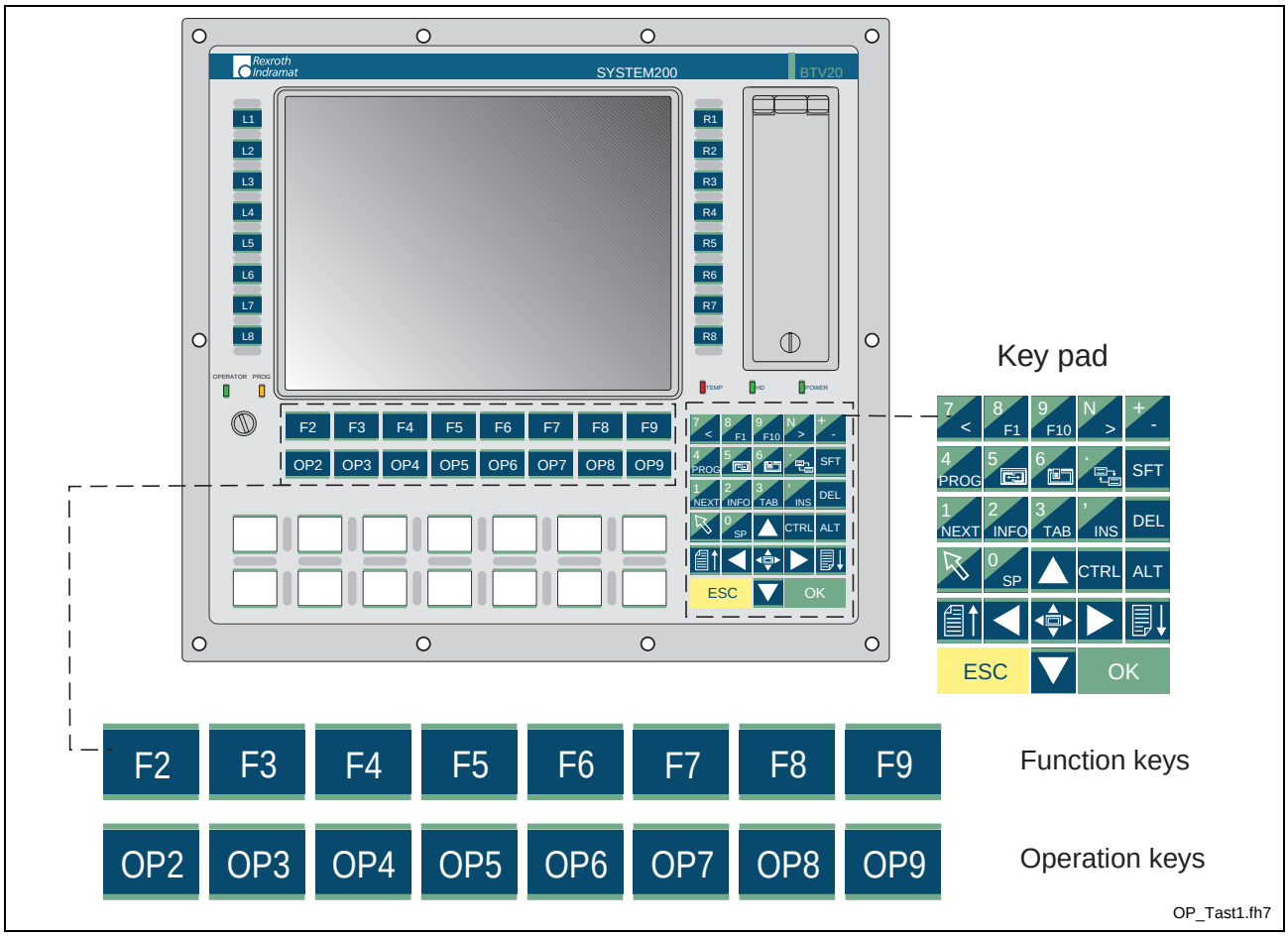

Fig. 4-3: Location of the OP and F keys

The second function of keys with dual assignments can be activated by pressing the “Arrow up” (Shift) key at the same time. 

Note: The OP Key-Line is also configurable with slide in labels (look at Chapter 4.5)

Explanation and emulation of the keys

The following key combinations permit the BTV20 keys to be emulated on a PC keyboard:

Key on the BTV20.3 unit	Corresponding key on the standard keyboard
OP2	CTRL + SHIFT + ALT + F2
through	
OP9	CTRL + SHIFT + ALT + F9
PROG	CTRL + SHIFT + ALT + Q
NEXT	CTRL + SHIFT + ALT + N
INFO	CTRL + SHIFT + ALT + I
Maximize in cursor center	CTRL + SHIFT + ALT + M
Menu	ALT
Change windows	CTRL + F6
Grasp window	CTRL + F7

Fig. 4-4: Key combinations for BTV20 keys

4.4 Machine and PLC Function Keys

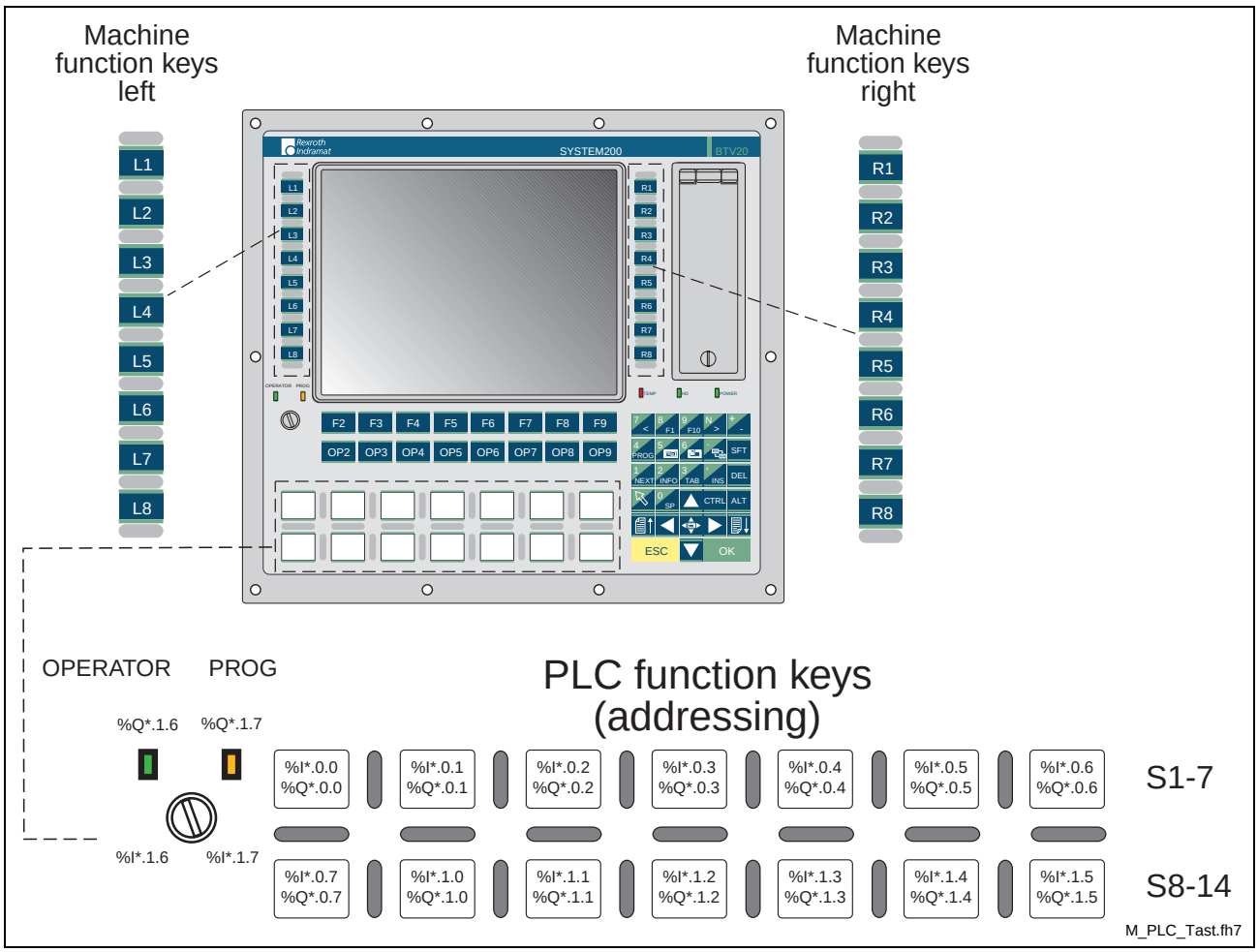

Fig. 4-5: Location of the machine and PLC function keys

Machine function keys

In the PLC, the machine function keys are available as direct hard-wired inputs and can be addressed there under an absolute address. These keys are used for starting configured PLC or CNC movements.

PLC function keys

In addition, the BTV20 unit features illuminated keys that can be labeled using insert strips. Together with the key switch, these keys are connected to the PLC. They replace standard switching elements for fixed PLC functions (such as ‘home position’ or ‘Halt after cycle end’).

Addressing via PLC

Machine function keys

In a BTV unit with integrated PLC, the machine function keys are connected directly to the PLC. Thus, they can directly be addressed via the PLC program.

Machine function keys	Address
L1	%I0.1480.0
L2	%I0.1480.1
L3	%I0.1480.2
L4	%I0.1480.3
L5	%I0.1480.4
L6	%I0.1480.5
L7	%I0.1480.6
L8	%I0.1480.7

R1	%I0.1481.0
R2	%I0.1481.1
R3	%I0.1481.2
R4	%I0.1481.3
R5	%I0.1481.4
R6	%I0.1481.5
R7	%I0.1481.6
R8	%I0.1481.7

Fig. 4-6: Addressing the machine function keys

Alternative with address constant

Instead of direct address specifications, address constants can be used for INDRAMAT firmware data types.

Machine function keys left/right

PLC program identifier	Address constants	Data type
MFT_L	A#iMFK_L	MFK_L
MFT_R	A#iMFK_R	MFK_R

Fig. 4-7: Addressing using address constants

The MFK_L data type contains the L1, L2,..., L8 elements of the BOOL type.

The MFK_R data type contains the R1, R2,..., R8 elements of the BOOL type.

Example in the PLC program **MFT_L.L1**

PLC Function Keys

PLC Function Key	Key address	LED address
S1 (see drawing)	%I*.0.0	%Q*.0.0
S2	%I*.0.1	%Q*.0.1
S3	%I*.0.2	%Q*.0.2
S4	%I*.0.3	%Q*.0.3
S5	%I*.0.4	%Q*.0.4
S6	%I*.0.5	%Q*.0.5
S7	%I*.0.6	%Q*.0.6
S8	%I*.0.7	%Q*.0.7
S9	%I*.1.0	%Q*.1.0
S10	%I*.1.1	%Q*.1.1
S11	%I*.1.2	%Q*.1.2
S12	%I*.1.3	%Q*.1.3
S13	%I*.1.4	%Q*.1.4
S14	%I*.1.5	%Q*.1.5
Keyswitch left (Operator)	%I*.1.6	%Q*.1.6
Keyswitch right (Prog)	%I*.1.7	%Q*.1.7

Fig. 4-8: Addressing the PLC Function Keys

For inputs and outputs, two free logical addresses must be assigned within the PLC configuration.

4.5 Changing slide-in labels

The 14 PLC function keys at the front of the BTV20 can be labelled with slide-in labels. Likewise the Key line upon the PLC-Functionkeys (OP2...OP9) are configurable about slide-in labels.

These labels which are inside the keys upon delivery can be changed as you like. Along with the blank labels, printed labels and a diskette with templates for the creation of key labels are delivered. A description on how to change the slide-in keys is added.

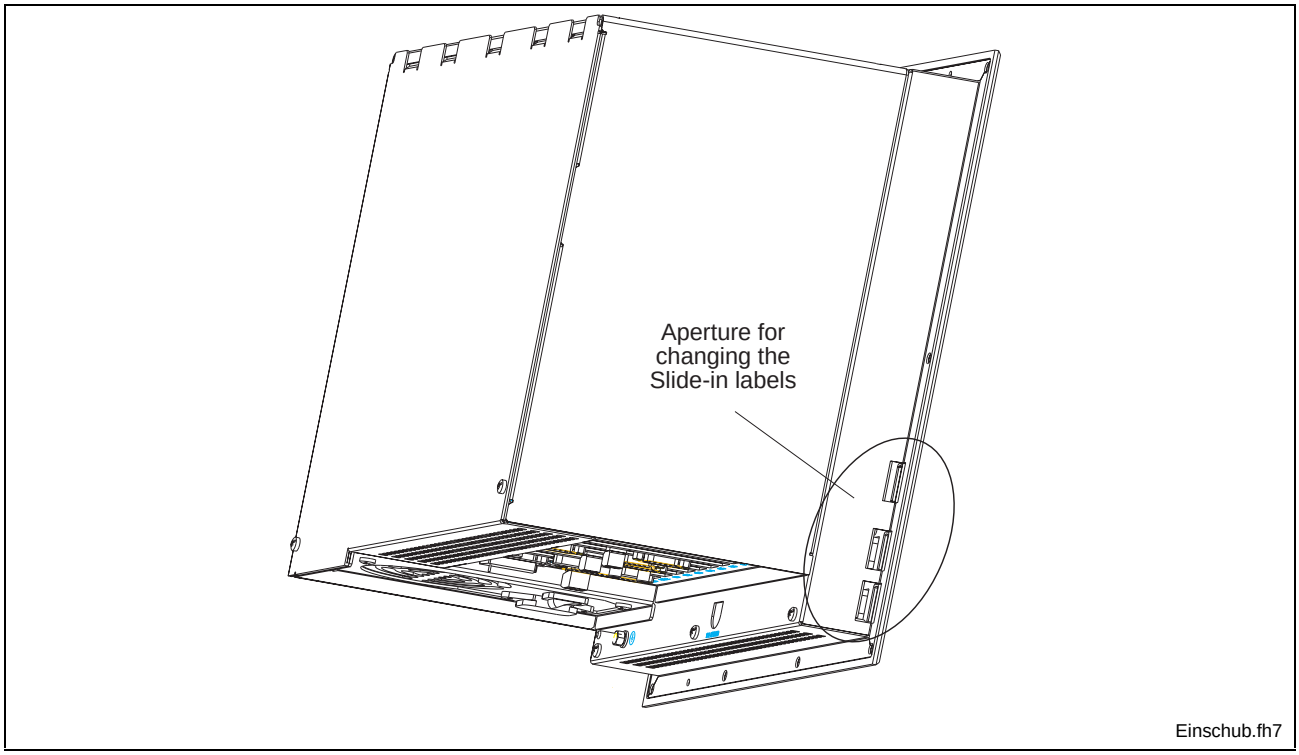

Fig. 4-9: Slide-in label aperture location

Slide-in label changing proceedings

1. The delivered and/or created labels must be cut at the lines.
2. Take the corners at the right end of the labels in order to facilitate sliding them in.
3. Slide in the label carefully.

a) Keep the label straight to the front plate while threading it into the housing aperture (see Fig. 4-10 part A).

Note: The slide-in label must be inserted in the bag of the attached front foil (see Fig. 4-10). If the strip should not be in the foil bag, inserting is possible only up to the first bar of the front plate.

b) Slide the label further into the pocket. Do not bend the paper label (see Fig. 4-10 part B).

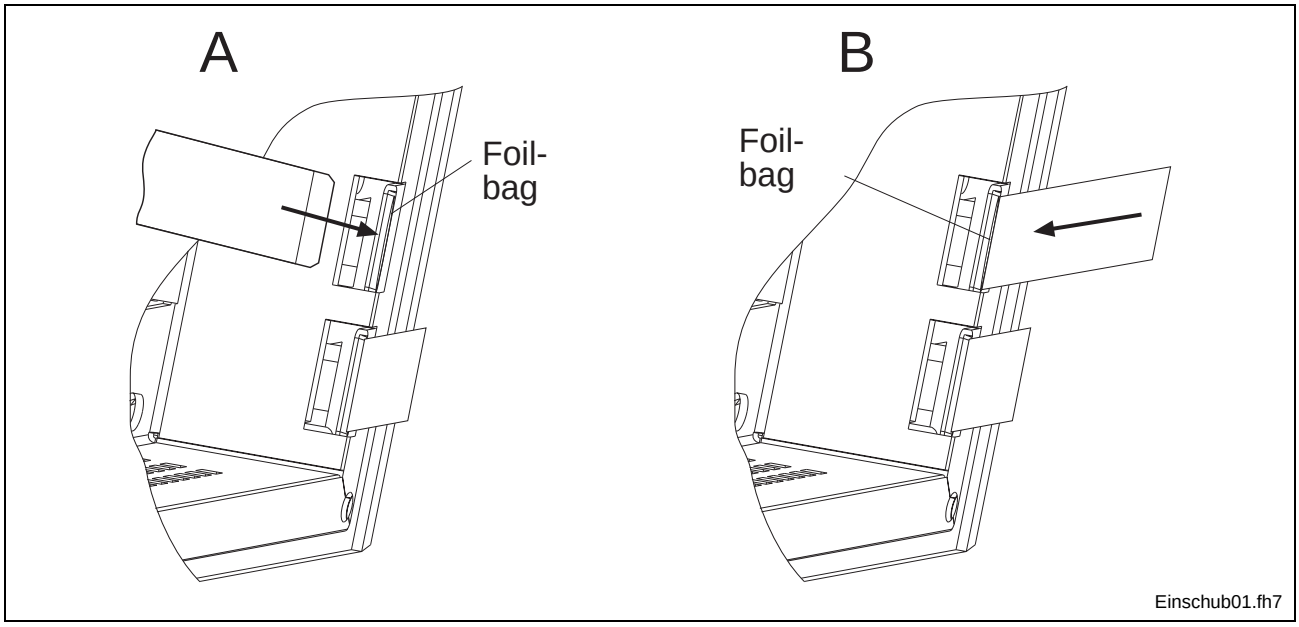

Fig. 4-10: Changing slide-in labels

4. Slide in the label until it is completely inside.
5. Check whether the keys and the labels fit on the front plate
   If this is not the case, remove the label, shorten it at the right side and slide it in again.
6. The rest can be cut; it must be possible, however, to change the label again easily.

4.6 Keyboard Layout

In order to guarantee that the internal keyboard as well as the external keyboard work correctly, it is necessary to consider some things. At delivery the keyboard driver and the keyboard layout of the requested language have already been configured correctly (according to the language of the installed operating system). Also the connection of an external keyboard, e. g. the pull out keyboard PCK03.1 is pre-installed upon delivery of the device. Modifications are not necessary unless a keyboard with keyboard layout is connected which does not correspond to the pre-set keyboard language. Furthermore, the internal laminated keyboard on the front of the BTV20 must be adjusted in the software. This modification is executed as follows.

Changing the keyboard language

External keyboard

In order to adjust the external keyboard , the following steps are necessary:

1. Select "keyboard" in the WindowsNT control panel.
   Path: Start - Settings - Control Panel - Keyboard

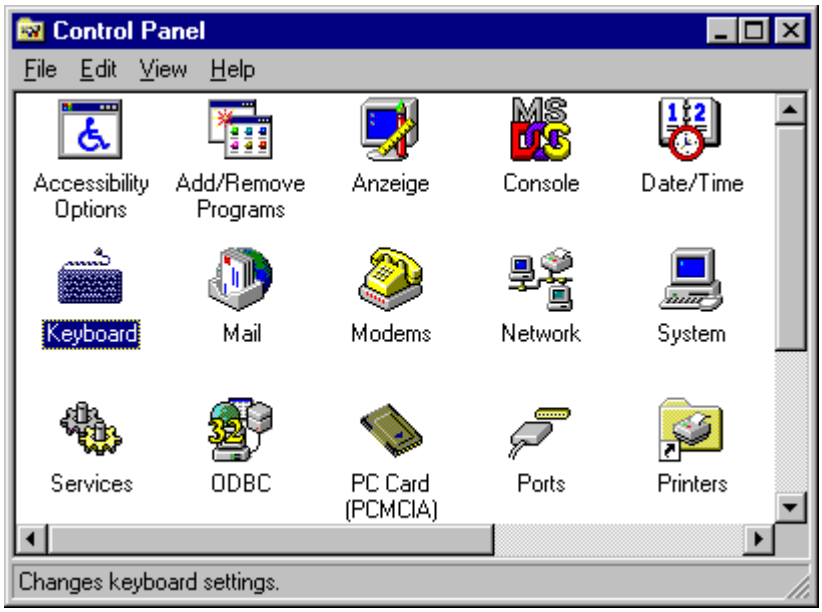

Keyboard.bmp

Fig. 4-11: Control Panel Icon "Keyboard"

2. Select the "Input locales" tab.
   The pre-set keyboard layout is displayed.
3. Click the "Add..." button.

4. Select the language of the external keyboard in use from the list (input locales).
   Use the standard properties for the input local..

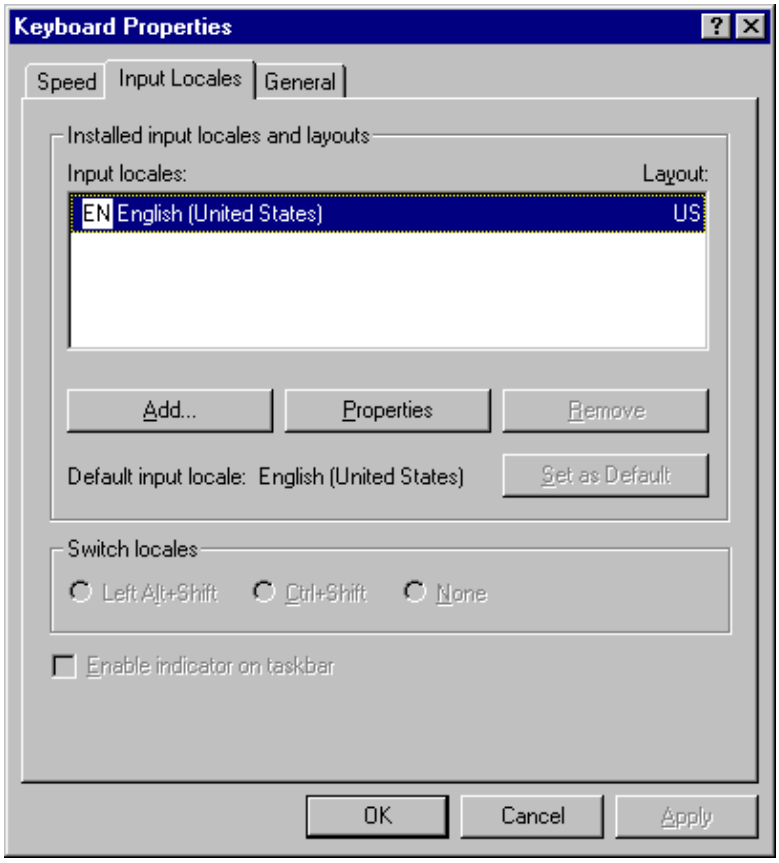

Properties.bmp

Fig. 4-12: Register "Input Locales"

This method allows the addition of a keyboard layout, i. e., various keyboard languages are displayed in the window and the requested language must be selected.

The "Properties" button in the Input Locales tab of the Control Panel directly allows the keyboard layout change to the requested language.

Note: After the modification, however, only the modified keyboard will be displayed in this window. It is not possible to choose between old and new keyboard layout like in "Add".

Internal keyboard

For adjustment of the internal laminated keyboard, an internal "BTV20" icon is included in the WindowsNT control panel. The following steps are necessary:

1. Start the "BTV20" menu item in the WindowsNT control panel.
   Path: Start - Settings - Control Panel - BTV20

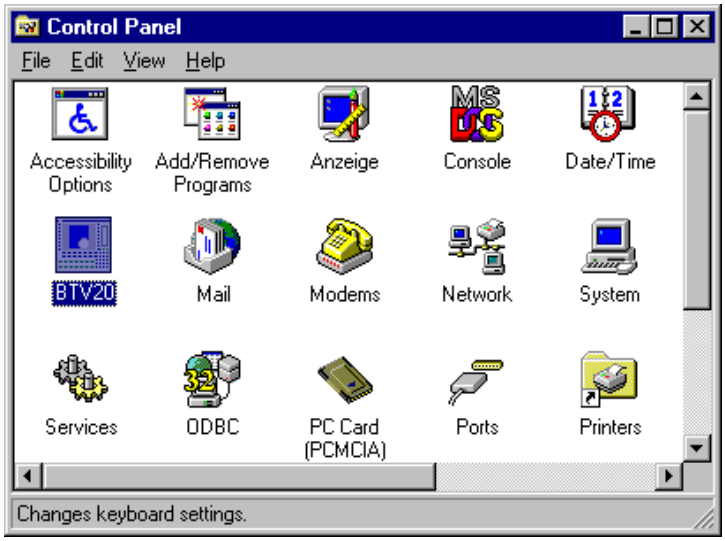

BTV20.bmp

Fig. 4-13: Control Panel Icon "BTV20"

2. If the "BTV20" icon does not exist in the control panel, the corresponding program must be installed. Therefore a utility diskette SWD-BTV20*-UTI-01VRS is delivered along with the BTV20. Installation: Insert diskette in drive A, enter A:\SETUP in Start - Execute. After the installation, shut down the operating system and start again with no. 1.
3. Select the requested keyboard layout and confirm it by clicking "OK".

BTV20_Keyboard.bmp

Fig. 4-14: Selection menu for the internal keyboard layout

Note: The selected language must correspond to the external keyboard settings in the operating system.

5 Technical Data

5.1 General Technical Data

Processor	Pentium - Slot CPU with min. 300 MHz and integrated graphic controller
Main Memory	64 MB (standard)
Hard Disk	min. 3 GB
Interfaces	1 serial (RS 232), , 1 parallel (Centronics), 1 x Indramat RS232/422/485
Display Unit	10.4" TFT color display
Card slots	3xPCI, 1xPCI/ISA, 4xISA
Keyboard	Machine operating keyboard, 16 machine function keys
Protection	Front panel IP 65, housing IP 20 DIN 40 050, IEC 529
Surface of front panel	Color RAL 7035 light gray
Dimension back housing	372 x 335 x 209 mm (BxHxT)
Dimension with front panel	407 x 370 x 220 mm (BxHxT)
Power supply	115/230 VAC ± 15%; Autorange
Max. Power consumption	250 VA
Typical Heat dissipation	100 W
Max. Heat dissipation	200 W
Weight	approx. 10,5 kg

5.2 Specification of the Power Supply Unit

Rated input voltage:	115/230 VAC switching automatically		
Input voltage area:	90..132 / 180..264 VAC, 47..63 Hz		
Input current:	4,2 A @ 115 V AC 2,0 A @ 230 V AC		
Max. switch on current:	35 A @ 115 V AC 70 A @ 230 V AC		
Output voltages:	Current	Tolerance	Residual ripple
+5 V	5...20 A	+5%/-4%	70 mV
- 5 V	0...0,5 A	+10%/-10%	150 mV
+12 V	2...8 A	+10%/-5%	150 mV
- 12 V	0...0,5 A	+13%/-8%	200 mV
Max. output power:	200 W		
Level of efficiency	70% at 230 V, 200 W		
Operating temperature:	0..45°C at 200 W 0..55°C at 100 W		
Environment temperature:	-10..+75°C		

Fig. 5-1: Specification of the Power Supply Unit

5.3 Ambient Conditions

	in Operation	**Storage/Shipping**
max. ambient temperature	+5°C to +45°C	-20°C to +60°C
max. temperature change	10 K/h	15 K/h
Rel. humidity	75% average, 80% occasional	no bedew, DIN 40 040 class F
Air pressure	860 to 1060 hPa, 1500m	12000m
Max. external magnetic field	6 x 10^{-4} Tesla	6 x 10^{-4} Tesla
max. vibration without / with FDD access	5-55 Hz +/-0,0375 mm Sinus 3 Axis 5-55 Hz +/-0,075 mm Sinus 3 Axis (Standard EN60068-2-6)	55-500 Hz 0,5g Sinus 3 Axis 55-500 Hz 1g Sinus 3 Axis (Standard EN60068-2-6)
max. shock without / with FDD access	15g 11ms Half sinus all directions (Standard EN60068-2-27)	30g 11ms Half sinus all directions (Standard EN60068-2-27)

Fig. 5-2: Ambient Conditions BTV20.3

5.4 Parts Subject to Wear

Parts subject to wear that are not covered by warranty

- Fan
- Backlight tubes
- Floppy Disk Drive (FDD)
- Hard Disk Drive (HDD)
- Battery (Slot CPU)

The average expected life span of parts subject to wear is 5 years or 20000 operating hours.

HD load

Specifications of HDD life are valid under the following conditions:	
Read/write cycles	40 cycles/day x 200 days/year
Seek processes	10^5 cycles/day x 200 days/year
Supply voltage on	14 h/day x 200 days/year
Operating hours (read/write)	8 h/day x 200 days/year
Ambient conditions	25°C; 50%RH; 100kPa; no vibration, no shock

Fig. 5-3: HDD load

6 Dimensions

6.1 Housing Dimensions

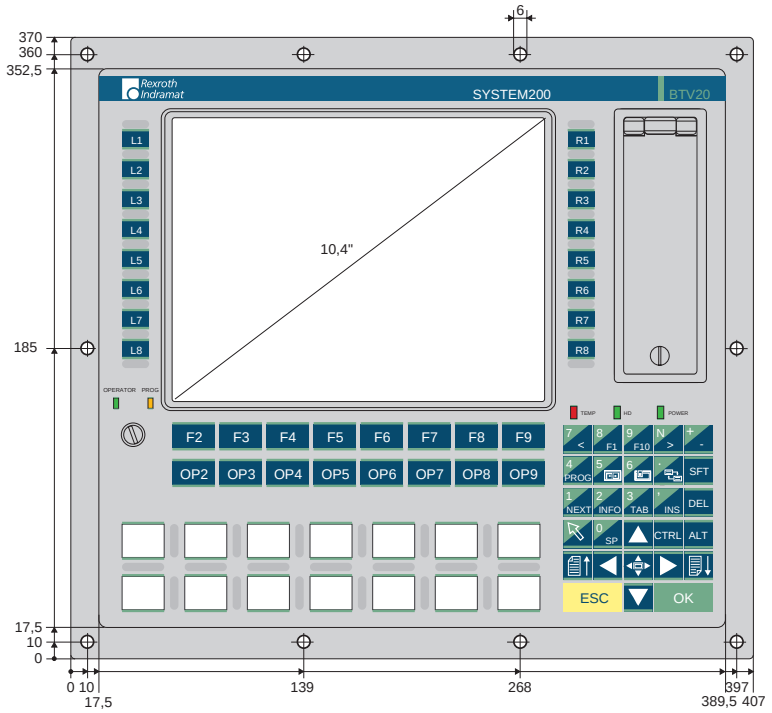

Fig. 6-1: Dimensions – Front panel

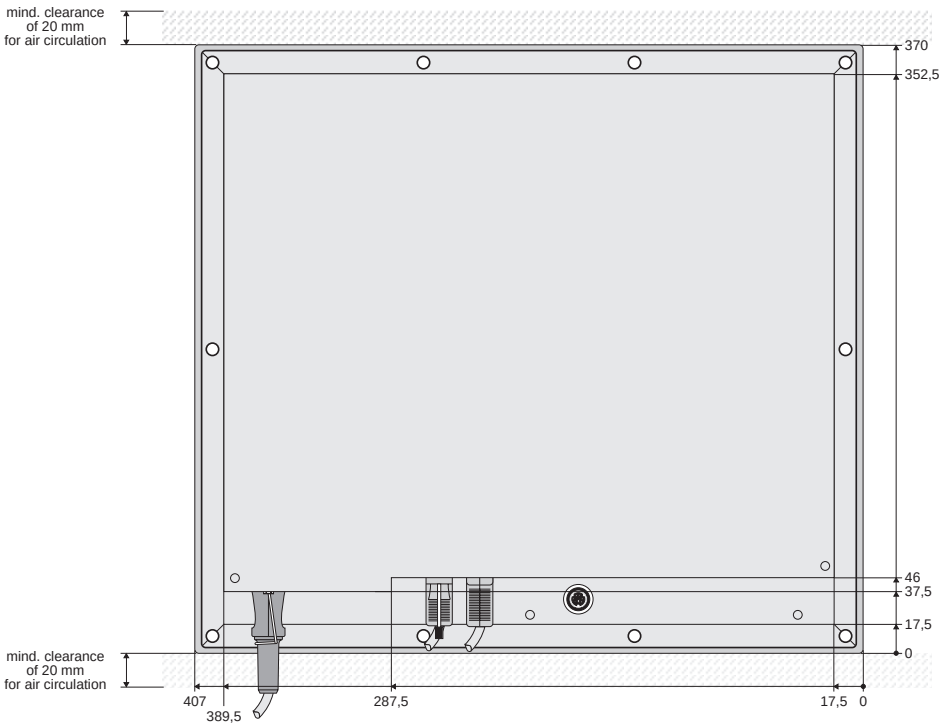

Fig. 6-2: Rear view

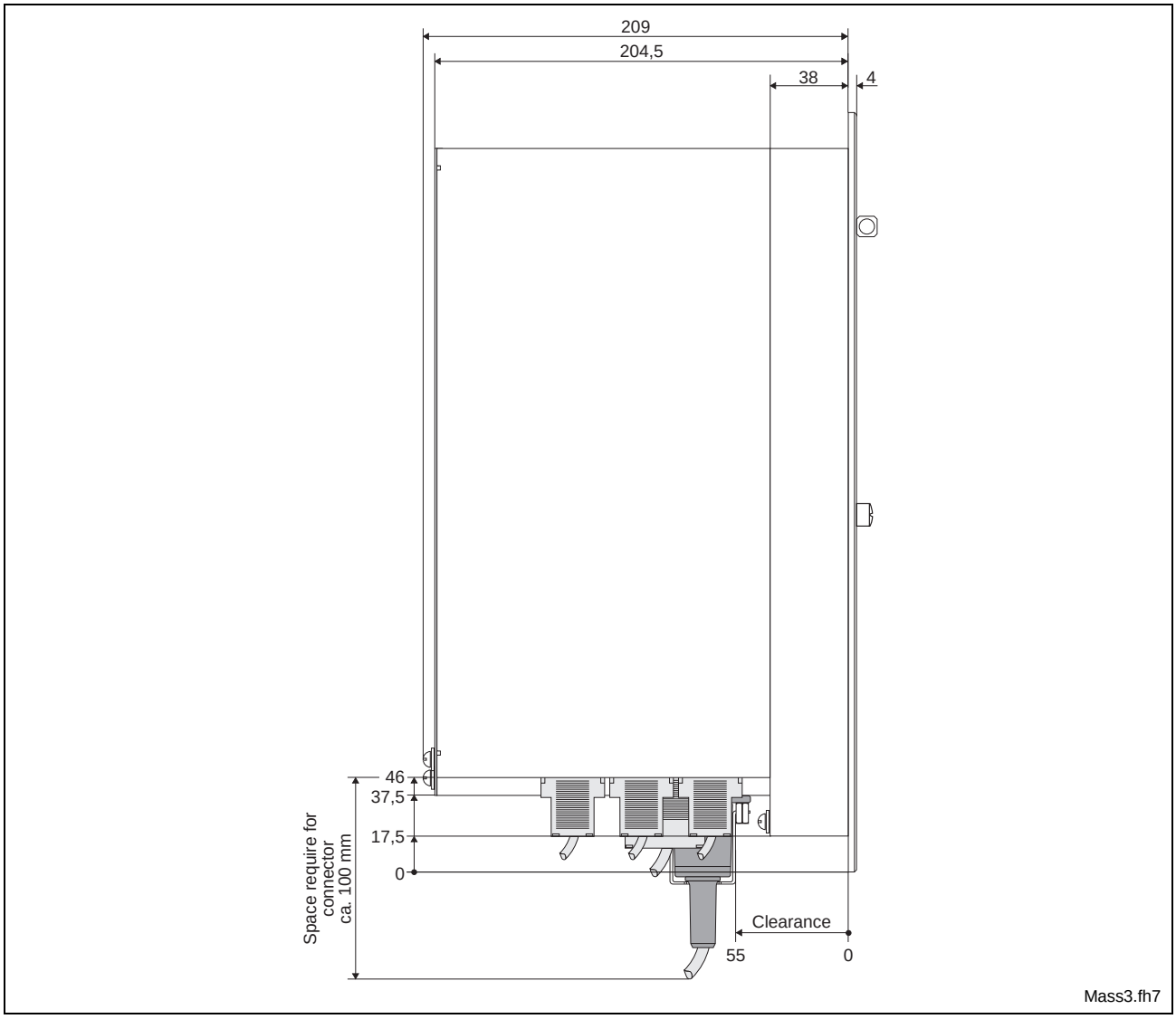

Fig. 6-3: Side view

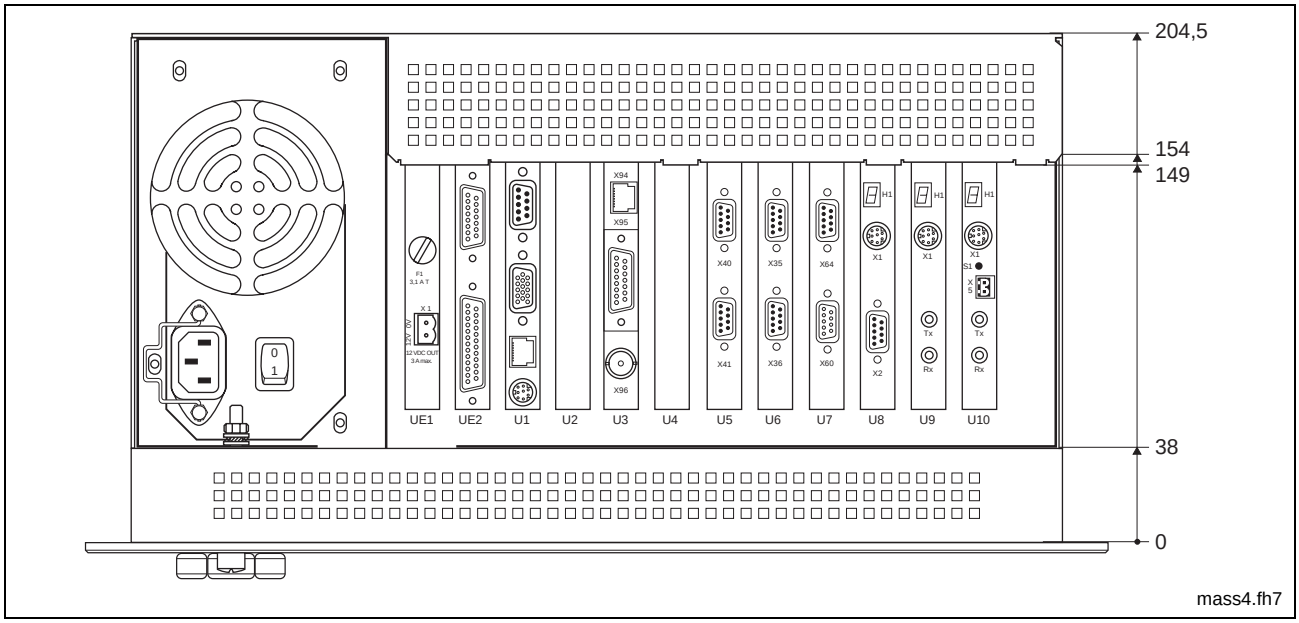

Fig. 6-4: Bottom view

6.2 Mounting Dimensions

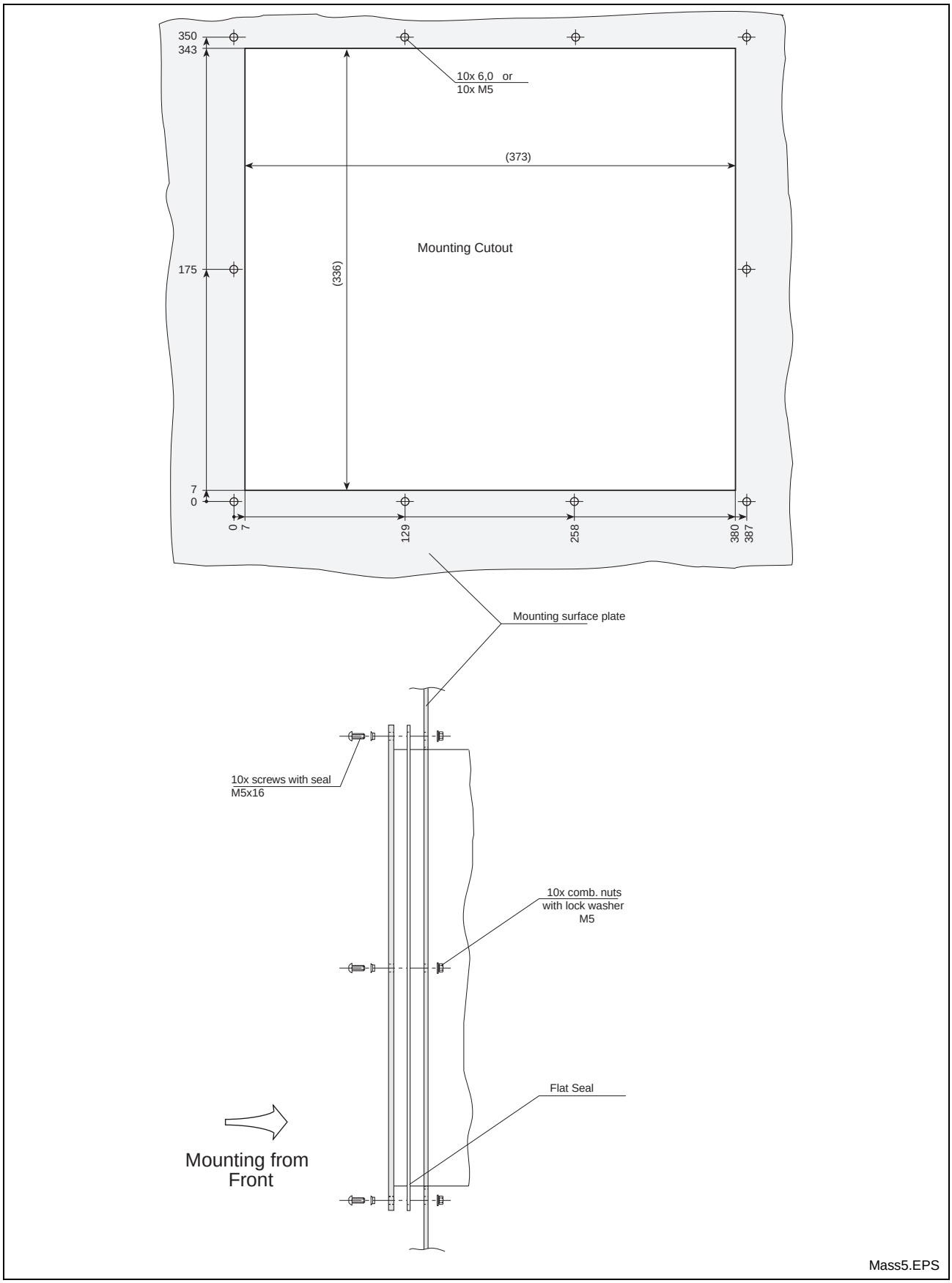

Fig. 6-5: Mounting Dimensions

7 Connections

7.1 General Connections

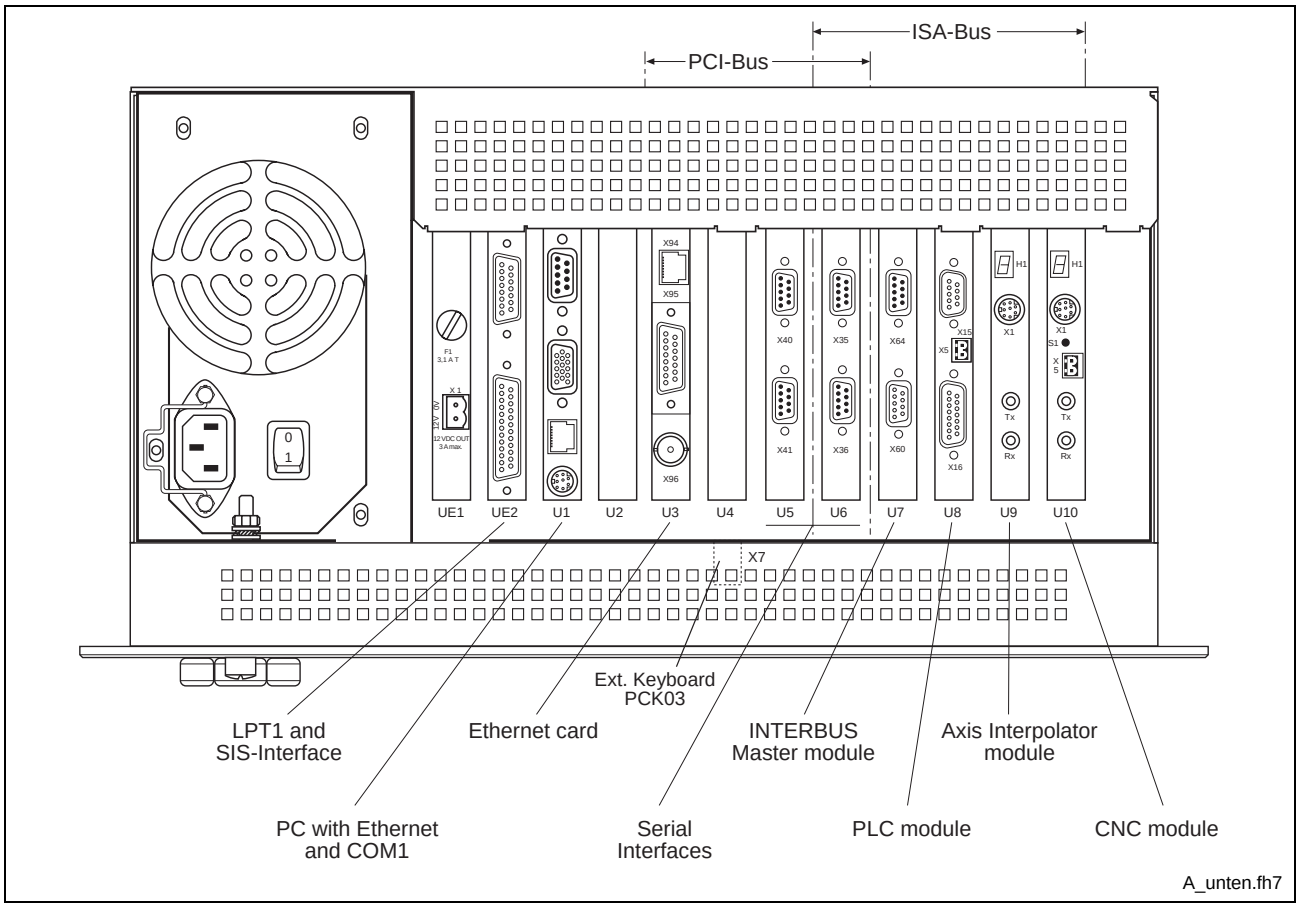

Fig. 7-1: Bottom view of a Configuration example

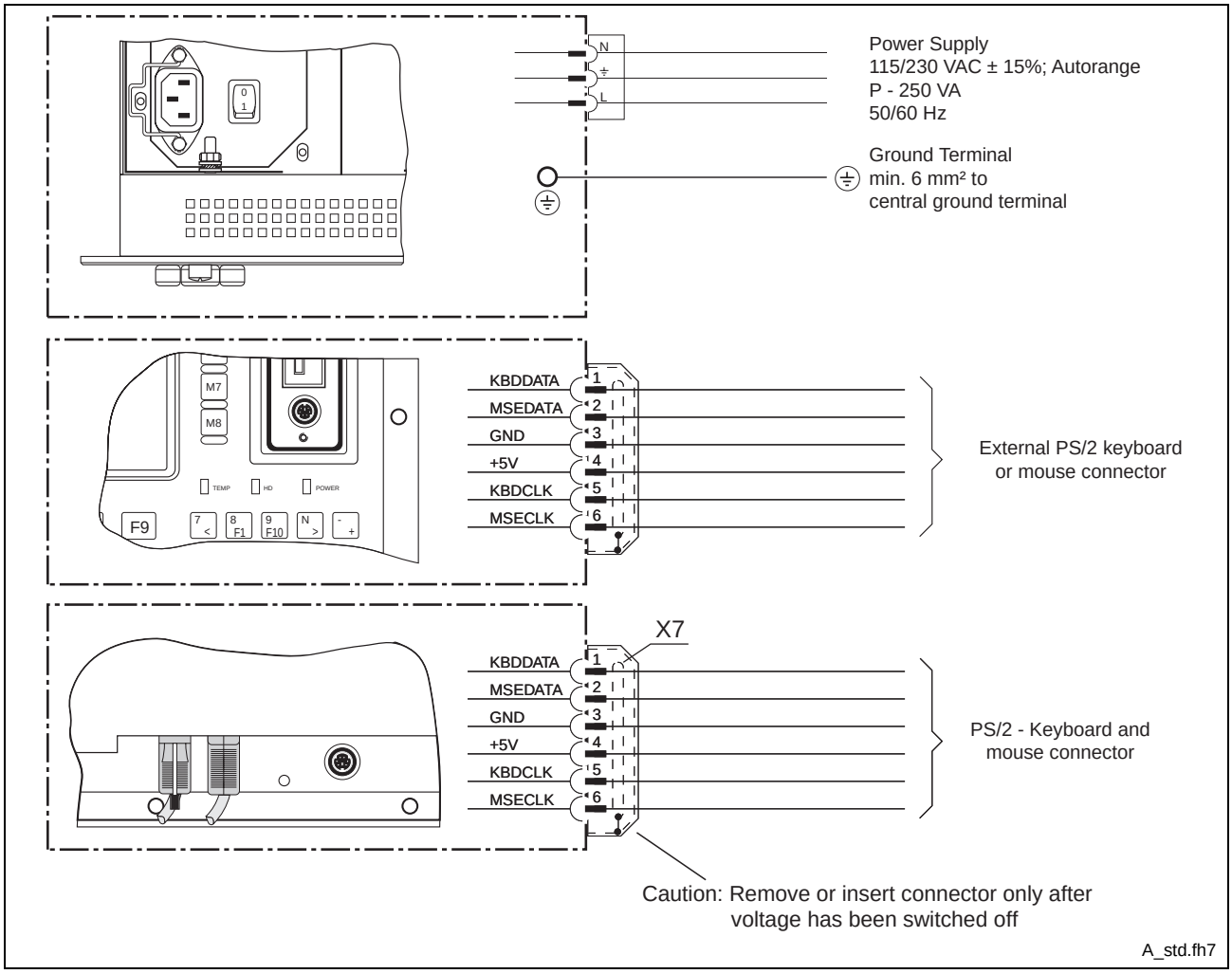

Fig. 7-2: Standard connections

7.2 Interfaces of the BTV20.3

Interfaces of the Slot CPU

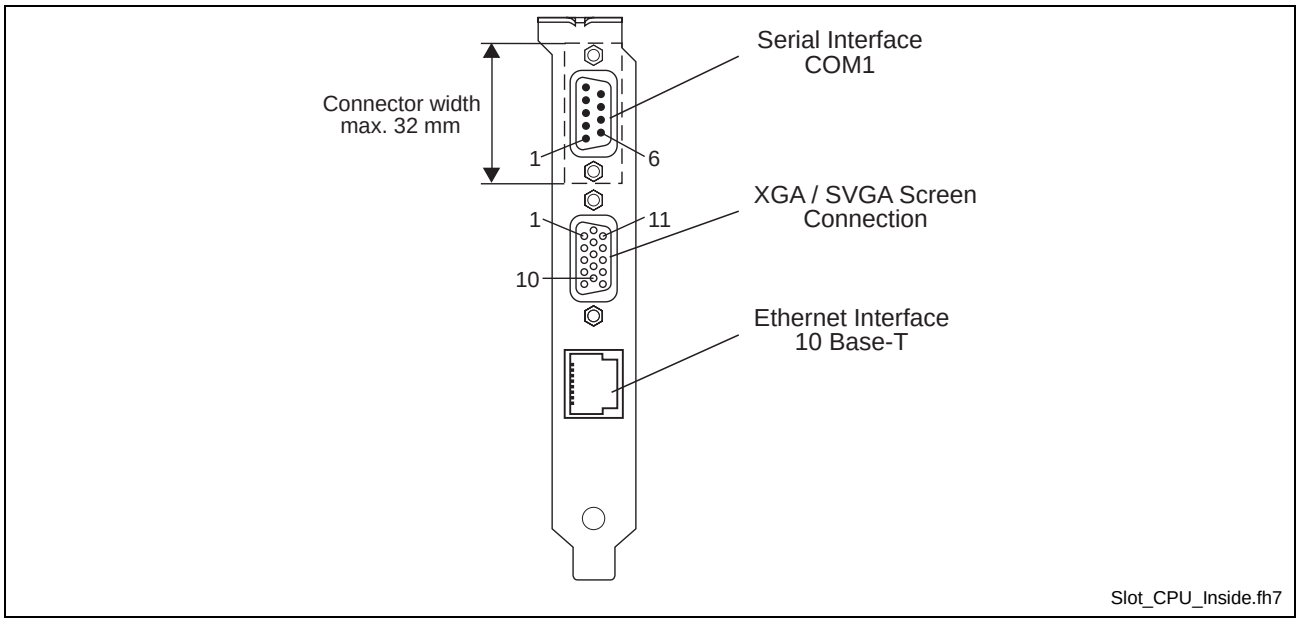

Fig. 7-3: Location of the Interface Connectors

Serial interface COM1

Pin	Signal name
1	DCD
3	TxD
5	GND
7	RTS (Note1)
9	N.C. (Note2)

Pin	Signal name
2	RxD
4	DTR
6	DSR
8	CTS

Fig. 7-4: Pin assignment of the Serial interface COM1

Note:

1. The CPU board is equipped with RS232 drivers operating with capacitor charge-pumps. The RS232 channel will operate from a 5 V supply only.
2. Please note, that the RI (Ring Indicator) signal is not supported in Serial port 1 due to the multi function RS232 / RS422 / RS485 capabilities. Do not connect anything to this signal in RS232 mode as it acts as output.

SVGA screen connection

Pin	Signal name
1	Video Signal Red
3	Video Signal Blue
5	DIG-GND
7	ANA-GND
9	VCC
11	N.C.
13	HSYNC
15	DDCCLK

Pin	Signal name
2	Video Signal Green
4	N.C.
6	ANA-GND
8	ANA-GND
10	DIG-GND
12	DDCDAT
14	VSYNC

Fig. 7-5: Pin assignment of the SVGA screen connection

Ethernet interface (10 Base-T)

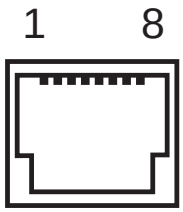

Fig. 7-6: Ethernet interface

Pin	Signal name
1	TxD +
3	RxD +
5	N.C.
7	N.C.

Pin	Signal name
2	TxD -
4	N.C.
6	RxD -
8	N.C.

Fig. 7-7: Pin assignment of the Ethernet interface

LPT1-Printer Port and SIS

The both interfaces are lead out to a separate slot metal sheet. They are internal directly connected to the Slot CPU across an printed wiring board (PSU02). The serial interface COM2 (X16) is wired by Indramat standard (SIS). The LPT printer port possess the standard centronics pin assignment. In Fig. 7-8 below you can see the individual pin assignments.

Section of bottom view

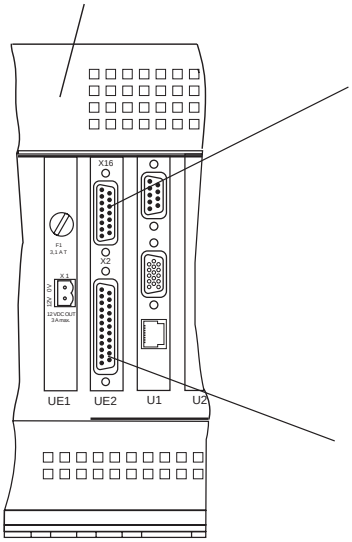

COM2 (X16)

Serial interface RS485/RS232

Pin	Signal name	Pin	Signal name
1	Protected Ground	2	TxD (RS232)
3	RxD (RS232)	4	RS485+ / RxD+ (RS422)
5	RS485- / RxD- (RS422)	6	Data Set Ready (RS232)
7	Signal Ground	8	Data Carrier Datected (RS232)
9	TxD+ (RS422)	10	GND
11	TxD - (RS422)	12	+5V
13	Request To Send (RS232)	14	Clear To Send (RS232)
15	Data Terminal Ready		

LPT1 (X2)

Printer port (Centronics)

Pin	Signal name	Pin	Signal name
1	/STB - Strobe	2	PD0
3	PD1	4	PD2
5	PD3	6	PD4
7	PD5	8	PD6
9	PD7	10	/ACK - Acknowledge
11	Busy	12	PE - Paper End
13	SLCT - Select	14	/AFD - Auto Feed
15	/ERR - Error	16	/INIT
17	/SLCTIN - Select In	18	GND
19	GND	20	GND
21	GND	22	GND
23	GND	24	GND
25	GND		

Ansicht_PSU.fh7

Fig. 7-8: Serial interface COM2 (SIS) and LPT1

Configuration

The configuration of the PSU02 is made by BIOS settings (Inside Utilities Fig. 8-15). Look at the table below which functions are possible.

General Purpose IO1	**General Purpose IO 4**	**General Purpose IO 6**	**Function RS485**	**Function RS422**
Output (high)	**Output (high)**	**Output (high)**	**Automatic (Default)**	**Off (Default)**
Output (low)	Output (high)	Output (high)	Input	Automatic
Output (high)	Output (low)	Output (high)	RTS-Control	Output
Output (low)	Output (low)	Output (high)	/RTS-Control	Output
Output (high)	Output (high)	Output (low)	Input	Output
Output (low)	Output (high)	Output (low)	Input	Automatic
Output (high)	Output (low)	Output (low)	Input	RTS-Control
Output (low)	Output (low)	Output (low)	Input	/RTS-Control

Fig. 7-9: Table of GPIO adjustment

7.3 Realisation of the BTV20 PC version

In the PC variant of the BTV20 unit, the unit only contains the CPU module. Controllers are not installed here. In the type code, this variant is identified by a **"P**" at position 4 (function type). In addition, the BIB05 plug-in module is employed. This module makes the machine function keys and the key switch of the BTV20 unit accessible via Interbus and ISA bus.

Technical implementation

The BIB05 module is a short 8-bit PC plug-in module. The keys can be addressed from the ISA bus and from the Interbus. To do this, 8 consecutive I/O addresses with a configurable base address from 0000h through 03C0h are assigned on the ISA bus.

Although both bus systems are able to read all keys simultaneously and independently of each other, only one bus system can set the LEDs in the S1 through S14 keys and at the key switch. A slide switch is used for selecting the bus system that is able to do this. In either case, the status of the LEDs can be read back via the ISA bus.

Configuration

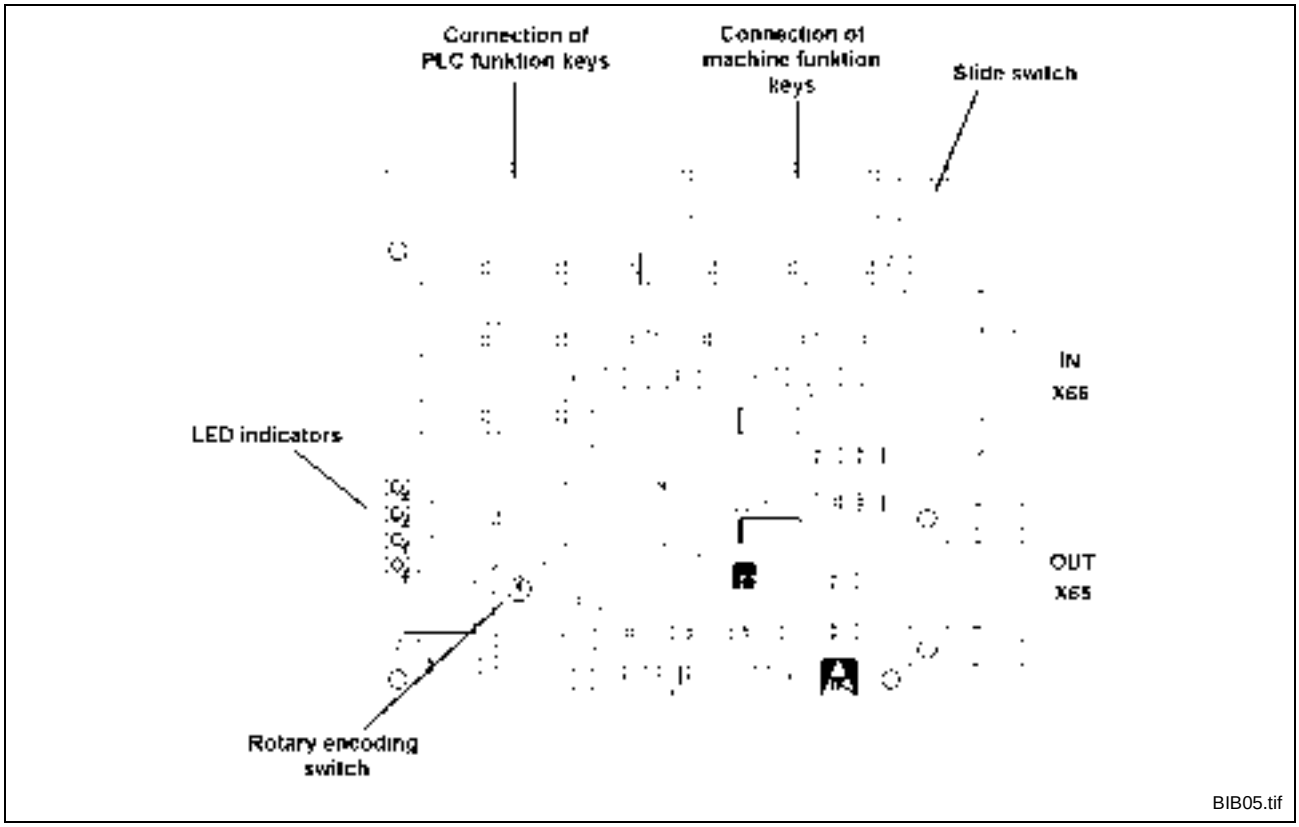

Fig. 7-10: BIB05 plug-in module

I/O address (ISA bus)

The I/O address is selected using a rotary encoding switch. The address distribution is as follows:

Switch position	Keys S1..S8	Keys S9..S16	Keys R1..R8	Keys L1..L8	LED Keys S1..S8	LED Keys S9..S16
0	03C0h	03C1h	03C2h	03C3h	03C4h	03C5h
1	0380h	0381h	0382h	0383h	0384h	0385h
2	0340h	0341h	0342h	0343h	0344h	0345h
3	0300h	0301h	0302h	0303h	0304h	0305h
4	02C0h	02C1h	02C2h	02C3h	02C4h	02C5h
5	0280h	0281h	0282h	0283h	0284h	0285h
6	0240h	0241h	0242h	0243h	0244h	0245h
7	0200h	0201h	0202h	0203h	0204h	0205h
8	01C0h	01C1h	01C2h	01C3h	01C4h	01C5h
9	0180h	0181h	0182h	0183h	0184h	0185h
A	**0140h**	**0141h**	**0142h**	**0143h**	**0144h**	**0145h**
B	0100h	0101h	0102h	0103h	0104h	0105h
C	00C0h	00C1h	00C2h	00C3h	00C4h	00C5h
D	0080h	0081h	0082h	0083h	0084h	0085h
E	0040h	0041h	0042h	0043h	0044h	0045h
F	0000h	0001h	0002h	0003h	0004h	0005h

Fig. 7-11: I/O address setting of ISA bus

The keys S15 (‘Operator’) and S16 (‘Prog.’) are key switches.

The base address upon delivery is 140h (‘A’).

Selecting the write access to keyboard LEDs

The write access is selected via a three-position slide switch. the assignments are as follows:

Switch position	Write access
1 (towards the circuitry)	ISA bus
Center	disabled (all LEDs OFF)
2 (towards the slot plate)	**Interbus**

Fig. 7-12: Selecting the write access to the LEDs

The configuration upon delivery is ‘Write access by Interbus’.

ID-Code

03h (Digital device with Input-/Output Datas)

Data width (2 words)

ISA bus address location

The BIB05 unit occupies 8 consecutive addresses in the I/O area. The base address is selected on a rotary encoding switch.

The keys S1 through S14 and the key switch contacts can only be read. The LEDs can be read and set (provided this has been selected via the slide switch).

Note: With the keys L1 through L8, R1 through R8, S1 through S14 and the key switch, a ‘1’ means that the related contact is closed.

I/O address	Bit 7 (MSB)	Bit 6	Bit 5	Bit 4	Bit 3	Bit 2	Bit 1	Bit 0 (LSB)
Base+0	S8	S7	S6	S5	S4	S3	S2	S1
Base+1	‘Prog’ key switch	‘Operator’ key switch	S14	S13	S12	S11	S10	S9
Base+2	R8	R7	R6	R5	R4	R3	R2	R1
Base+3	L8	L7	L6	L5	L4	L3	L2	L1
Base+4	LED 8	LED 7	LED 6	LED 5	LED4	LED 3	LED 2	LED 1
Base+5	LED ‘Prog’	LED ‘Operator’	LED 14	LED 13	LED 12	LED 11	LED 10	LED 9

Fig. 7-13: ISA bus address assignments

Interbus address location

The Interbus base address (I base) of the BIB05 module depends in the other devices that exist in the Interbus chain.

Note: With the keys L1 through L8, R1 through R8, S1 through S14 and the key switch, a ‘1’ means that the related contact is closed.

The address assignments within the BIB05 module are as follows:

PLC function keys	Key address	LED address
S1 (see drawing)	%I*.4.0	%Q*.0.0
S2	%I*.4.1	%Q*.0.1
S3	%I*.4.2	%Q*.0.2
S4	%I*.4.3	%Q*.0.3
S5	%I*.4.4	%Q*.0.4
S6	%I*.4.5	%Q*.0.5
S7	%I*.4.6	%Q*.0.6
S8	%I*.4.7	%Q*.0.7
S9	%I*.5.0	%Q*.1.0
S10	%I*.5.1	%Q*.1.1
S11	%I*.5.2	%Q*.1.2
S12	%I*.5.3	%Q*.1.3
S13	%I*.5.4	%Q*.1.4
S14	%I*.5.5	%Q*.1.5
Keyswitch left (Operator)	%I*.5.6	%Q*.1.6
Keyswitch right (Prog)	%I*.5.7	%Q*.1.7

Fig. 7-14: Adressing the PLC function keys with BIB05

Machine function keys	Address	Machine function keys	Address
L1	%I*.7.0	R1	%I*.6.0
L2	%I*.7.1	R2	%I*.6.1
L3	%I*.7.2	R3	%I*.6.2
L4	%I*.7.3	R4	%I*.6.3
L5	%I*.7.4	R5	%I*.6.4
L6	%I*7.5	R6	%I*.6.5
L7	%I*.7.6	R7	%I*.6.6
L8	%I*.7.7	R8	%I*.6.7

Fig. 7-15: Adressing the Machine function keys with BIB05

Pin assignment of the INTERBUS Out (X65)

Pin	Signal	Pin	Signal
1	DO Data Out	2	DI Data In
3	GND	4	N.C.
5	+ 5V	6	/DO Data Out
7	/DI Data In	8	N.C.
9	RBST		

Fig. 7-16: Pin assignment of the Interbus Out (X65)

Pin assignment of the INTERBUS In (X66)

Pin	Signal	Pin	Signal
1	DO1 Data Out	2	DI1 Data In
3	GND	4	N.C.
5	N.C.	6	/DO1 Data Out
7	/DI1 Data In	8	N.C.
9	N.C.		

Fig. 7-17: Pin assignment of the Interbus In (X66)

7.4 Internal Wiring

In Fig. 7-18 you look inside the BTV20.3. You can see in the picture how the cards are arranged and how they are connected to each other or to the hard disk and floppy disk drive.

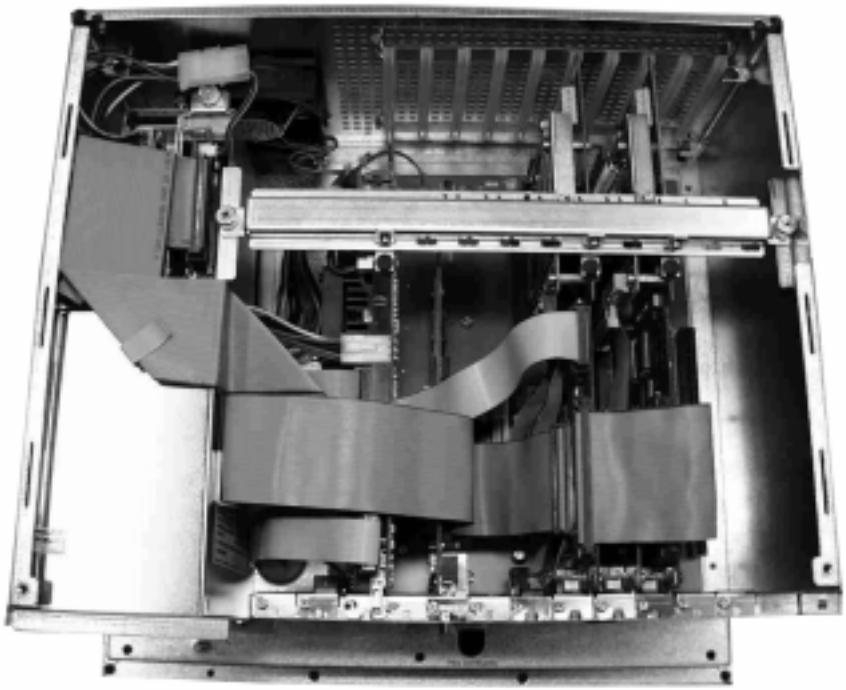

btv203_rueck_sw.tif

Fig. 7-18: Inside the BTV20.3

7.5 Application Example

Example for BTV20 with MTS-P and INTERBUS Connection

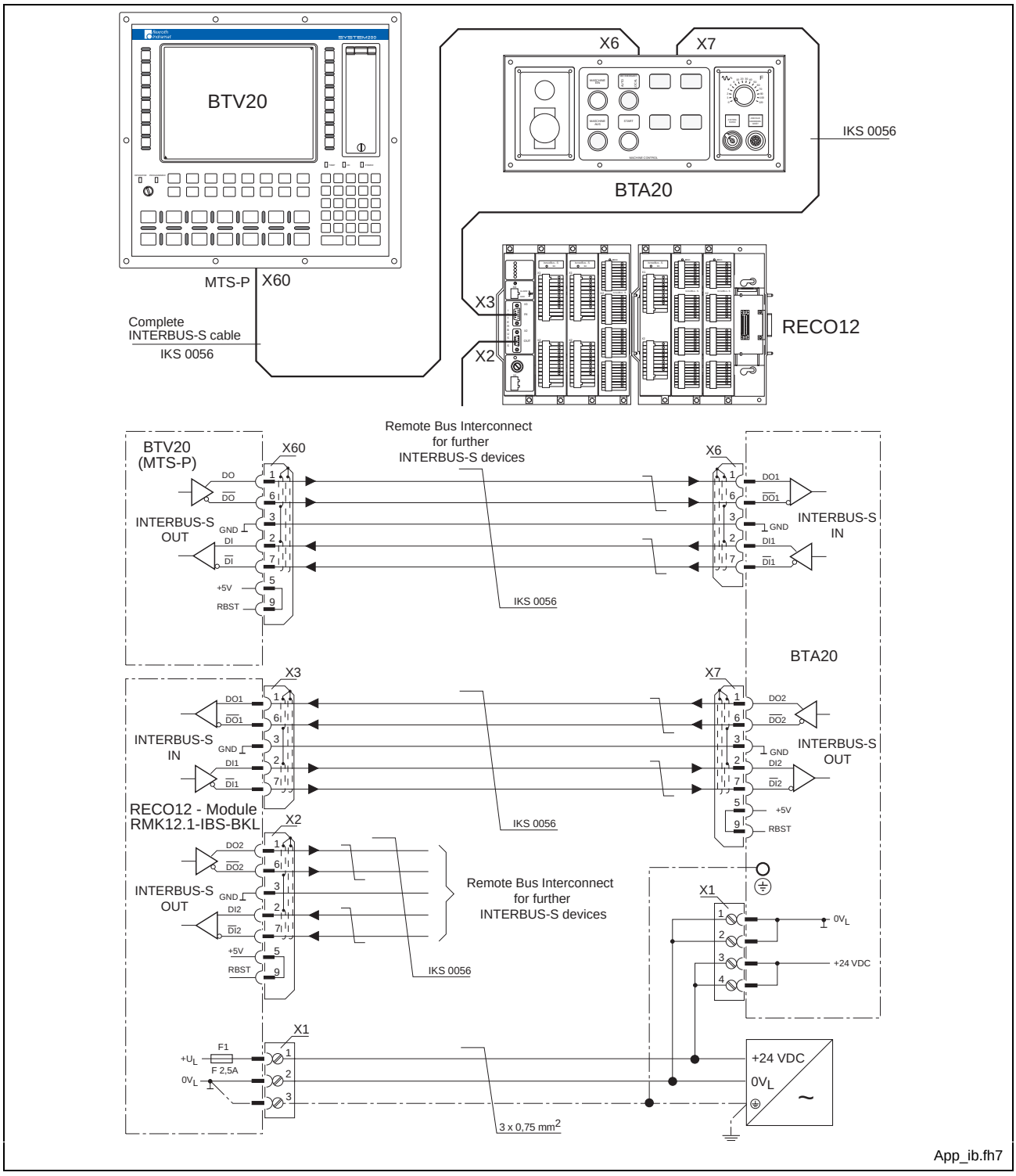

Fig. 7-19: Interbus-S connection example

Application Example with BTA10/20 and BTC06

Unit Arrangement

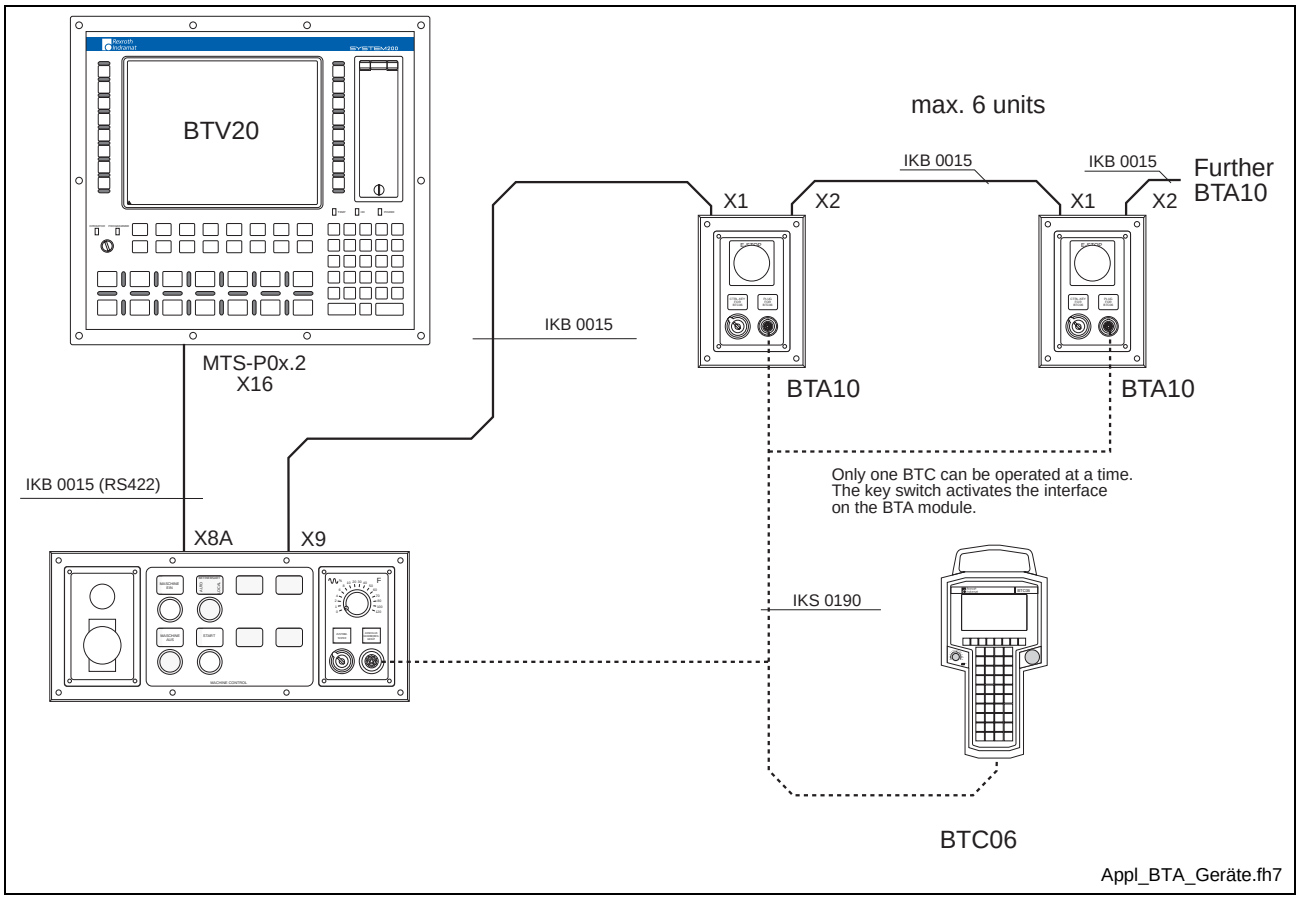

Fig. 7-20: Unit arrangement

In the MTS-P0**x.2** (identified with 2D in the configuration type code of the BTV20) and in the fast PLC (identified with 2F) a 15-pin Indramat standard interface bush has already been integrated into the slot so that a BTA20 is connected to the BTV20 via cable IKB0015 (see Fig. 7-21).

Note: Only RS422 communications are possible between the units.

Cabling with MTS-P0x.2 (BTV20)

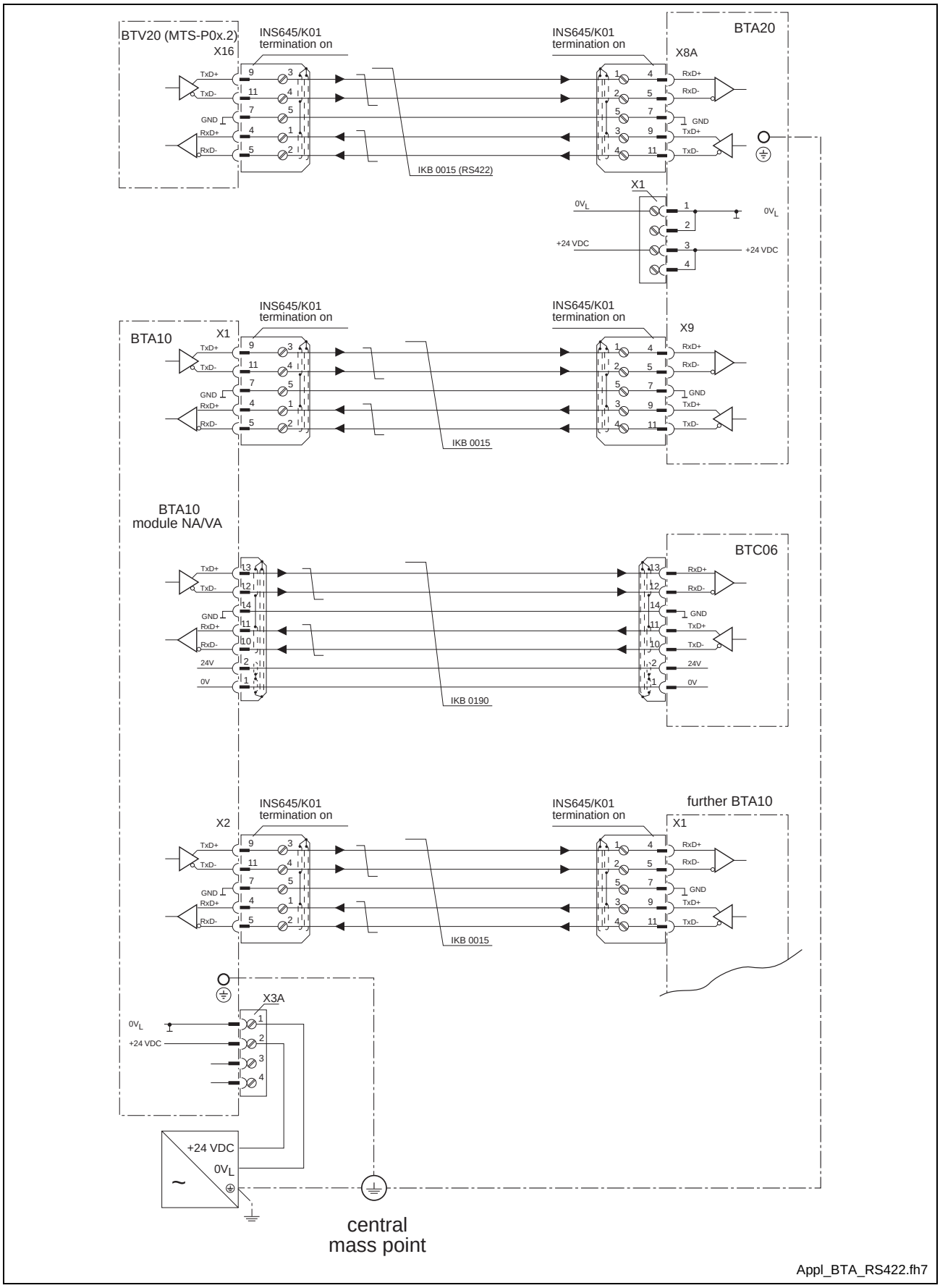

Fig. 7-21: Connecting a BTA10/20 to a BTV20

Application Example of a BTV20 and Additional Interfaces

There is also the option of directly connecting the BTA10 to a BTV20. For this application a BTV20 configuration must exist which makes two additional interface slots available. These slots are internally conducted to printed circuit board "SIO". This becomes obvious in the configuration type code of the BTV20 with the designation **S4**.

Example: CFG-BTV20.3E-NN-2T-NN-BB -**S4**-B1 -2D-2E-NN

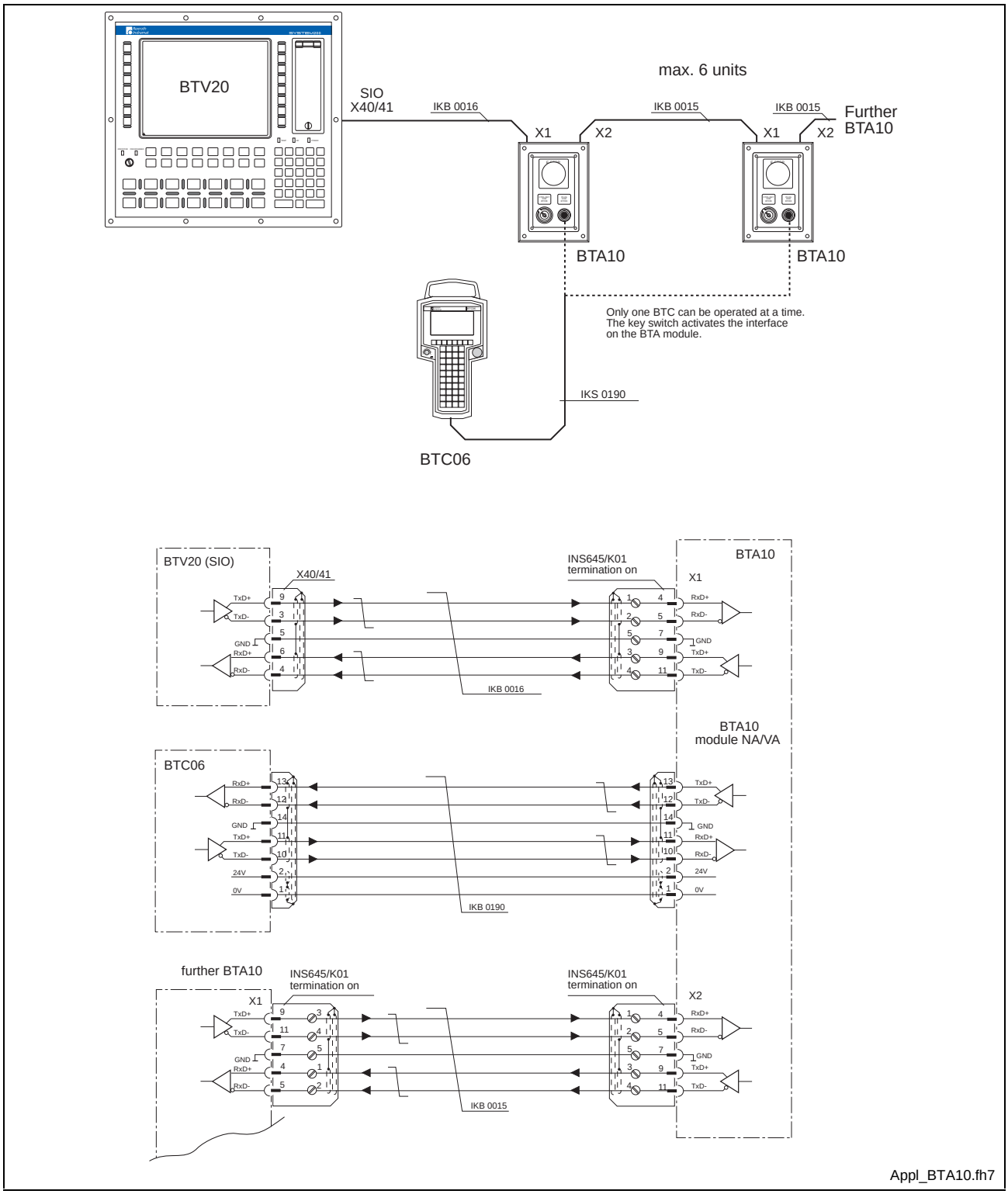

Fig. 7-22: Connecting a BTV20 with SIO

Application Example for MTC-P and SERCOS-Interface

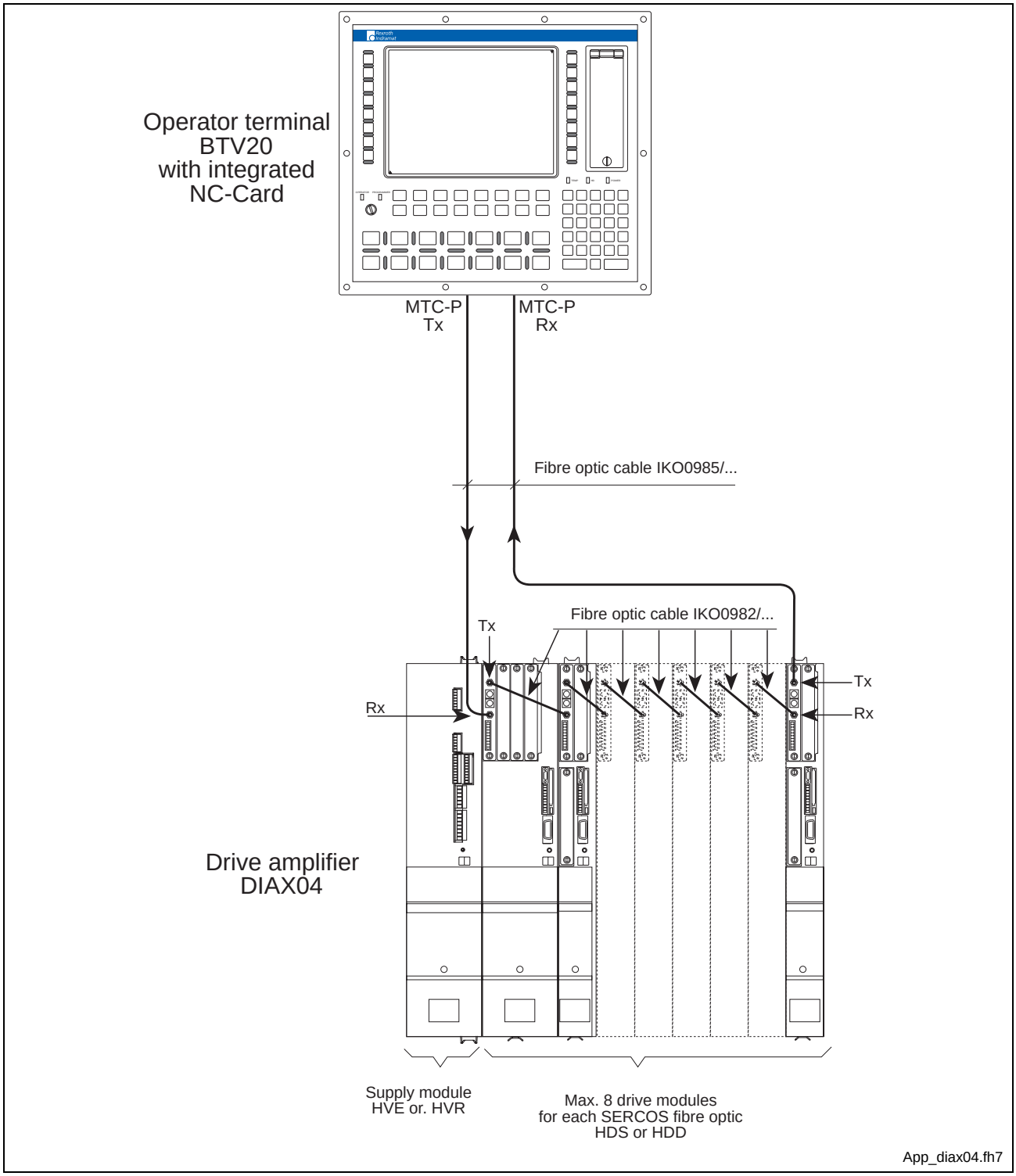

Fig. 7-23: SERCOS Connection

BTV20.3 with one Sercos Interface Module (i. e. for 8 axis).

Standard Interface connectors

There are appropriate connectors available for both RS422 and RS485 communication. These include termination in the housing already. The cable can be mounted with the use of screw-in clamps. Pin assignment of both connectors is illustrated (see Fig. 7-24).

Which connector housing is to be used with which interface cable is specified in chapter 11.3 (accessories) per the table.

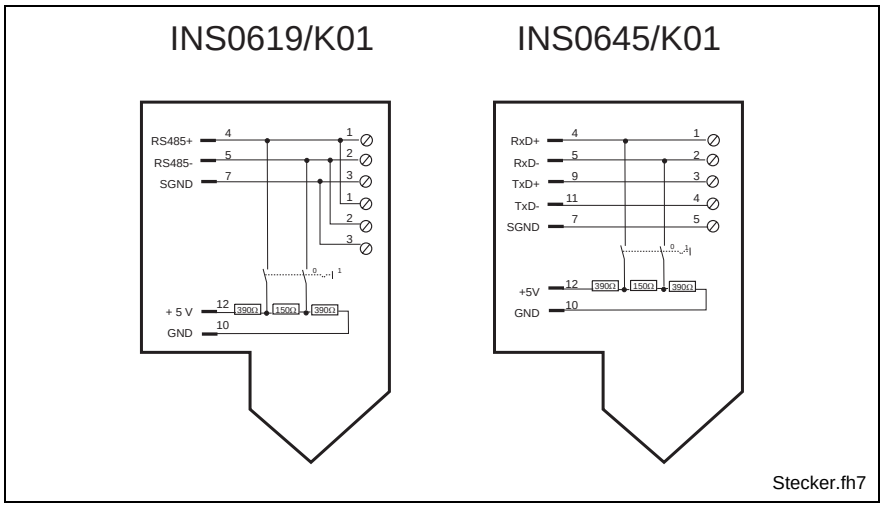

Fig. 7-24: Connector assignment of the standard connector housing

Termination can be added by using the appropriate switch.

8 SLOT-CPU Card

8.1 Performance Characteristics

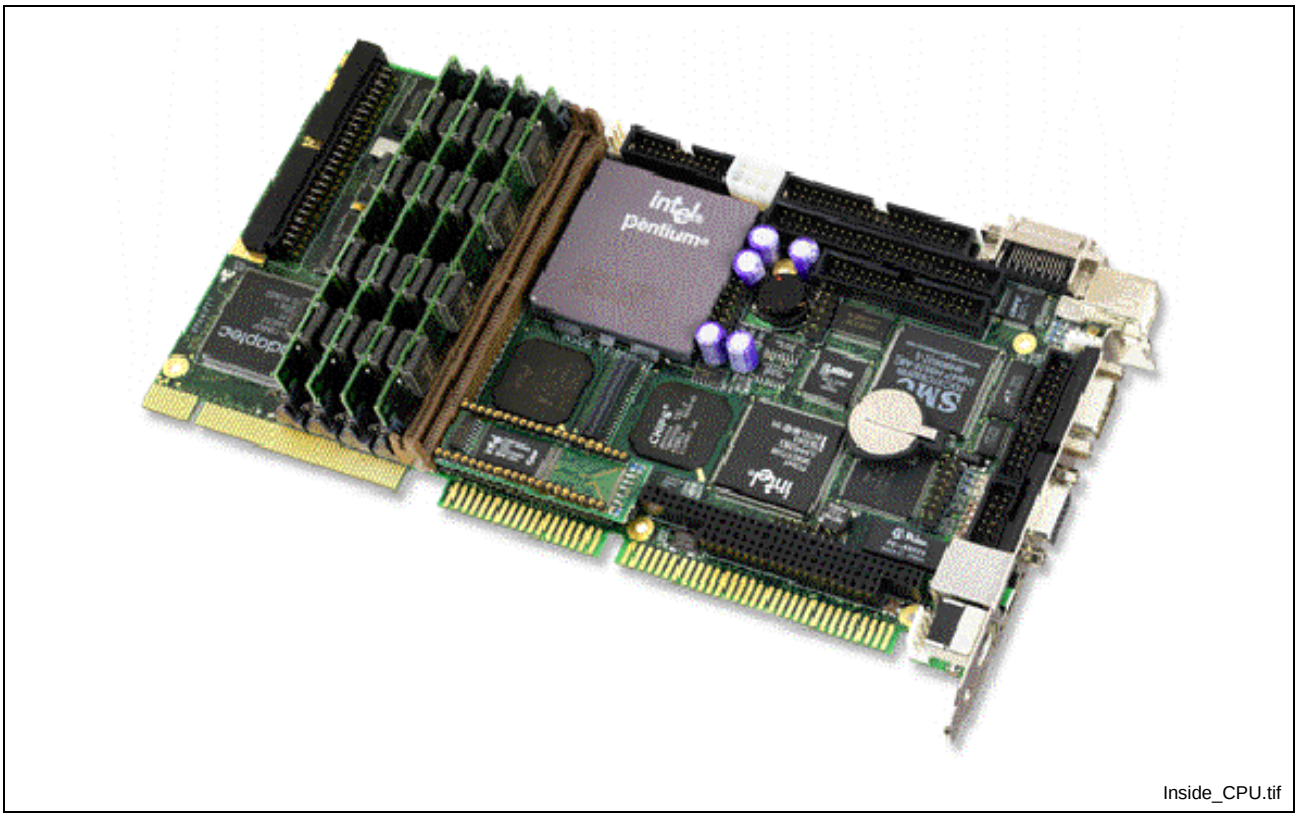

Fig. 8-1: Inside CPU Board 686LCD/MG

- 64 Bit onboard Video Controller with 4 MB Video Ram
- Flat Panel interface as well as standard VGA analogue monitors
- RS232C or 1 x RS232C and 1 x RS422/485 serial interface channels, one parallel printer port, one EIDE compatible hard disk interface and one floppy disk controller for peripheral support
- PCI Ethernet with 10BASE-T and RJ45 interface
- USB (Universal Serial Bus)

8.2 Technical Data

Electrical Specification

Power Supply	+5, +12 V (+/- 3%). Can operate at +5 volt only
Power Consumption	10-20W typical (Dependent on processor type)
Backup batteries	+3.0 Volt Battery (CR2032, Lithium)
Dimensions	249.7 mm x 122.9 mm x 20.0-35.0 mm
Environmental Conditions	0°C - 60°C operating temperature (forced cooling) 10% - 90% relative humidity (non-condensing)

Fig. 8-2: Electrical Specification

CPU and Memory Specification

Processor	AMD, K6 III min. 300 MHz
CPU Clock Rate	300 - 400 MHz
System Clock Rate	Processor/PCI : 66/33, 60/30, 50/25 MHz
Program Memory	Up to 512MB DRAM memory, EDO or Fast Page
System Core	INTEL 430HX

Fig. 8-3: CPU and Memory Specification

Onboard Video Controller

Video Controller	64 Bit SVGA controller connected to PCI bus for fast access. Controls CRT monitors and Flat panel.
Video Resolution	1280 x 1024 pixel (256 colors), SXGA 1024 x 768 pixel (64 k colors), XGA 800 x 600 pixel (16Mil. colors), SVGA 640 x 480 pixel (16Mil. colors), VGA.
Video Memory	4MB

Fig. 8-4: Specification of the Onboard Video Controller

General Specifications

Dimensions	249.7 mm x 122.9 mm x 20.0-35.0 mm
Environmental Conditions	0°C - 60°C operating temperature (forced cooling) 10% - 90% relative humidity (non-condensing)
Plug and Play Features	All configuration is done by software (Automatic or user-setup) Automatic processor type detection and setup. Automatic remapping of on-board peripherals, if conflicts with off-board controllers are detected.
Flat Panel Interface	Active color TFT, SS, 9/12/15/16/18/24 bit.
Ethernet	10M bit 10BASE-T. Controller on PCI bus with master access capabilities
USB	Universal Serial Bus. 12 Mbit
BIOS	System: American Megatrends, Industry standard, 128kB - Video: Chips & Technologies, 44kB - INSIDE BIOS extens.: Setup utility & SSD code, 64kB
Watchdog circuit	Supervision of power supply and program execution Startup delay. Service interval can be selected
Real-Time-Clock and CMOS Memory	Date, time and system config. (with battery backup)
Secure CMOS option	Security backup of CMOS memory within Flash BIOS for auto reload, if CMOS memory is lost
On-board Peripheral interfaces .	AT-keyboard interface, 2 x RS232C or 1 x RS232C and 1 x RS/485 serial communication interface supported by NS16550 comp. UART's, 1 x Parallel printer interface (Centronic, ECP, EPP mode). EIDE hard disk interface Floppy drive interface (2 x 360kB to 1.44MB) Standard VGA Controller with Flat Panel Port.

Fig. 8-5: General Specifications

8.3 AMIBIOS Setup

AMIBIOS Setup configures system information that is stored in CMOS RAM. AMIBIOS Setup has an easy-to-use graphical user interface that will be immediately recognisable to anyone who has ever used Microsoft Windows. This AMIBIOS Setup sets a new standard in BIOS user interfaces.

The Main Setup Screen of the system BIOS is entered by pressing the ***<del>*** key during the start-up sequence when the following appears:

Hit <DEL> if you want to run SETUP

The AMIBIOS Setup can be accessed via keyboard, mouse, or pen.

Help Screens

AMIBIOS Setup provides Help Screens for Advanced Setup, Chipset Setup, Power Management Setup, and Peripheral Setup.

Help on mouse and keyboard are also available. Choose Help by pressing <Alt> <H>.

Using a Mouse with AMIBIOS Setup

Point and Click Interface AMIBIOS Setup uses the familiar point and click navigation technique. The end user can point with the mouse anywhere on the screen, click the left mouse button, and AMIBIOS Setup control is transferred to the new location.

The mouse click functions are:

- single click to change or select both global and current fields and
- double-click to perform an operation in the selected field.

Using the Keyboard with AMIBIOS Setup

AMIBIOS Setup has a built-in keyboard driver that uses simple keystroke combinations:

Keystroke	Function
<Tab>	Move to the next window or field.
→↓←↑	Move to the next field to the right, below, left, or above.
<Enter>	Select in the current field.
+	Increments a value.
-	Decrements a value.
<Esc>	Closes the current operation and return to previous level.
<PgUp>	Returns to the previous page.
<PgDn>	Advances to the next page.
<Home>	Returns to the beginning of the text.
<End>	Advances to the end of the text.
<Alt> <H>	Access a help window.
<Alt> <Spacebar>	Exit AMIBIOS Setup.

Alphabetic keys	A to Z are used in the Virtual Keyboard, and are not case-sensitive.
	0 to 9 are used in the Virtual Keyboard and Numeric Keypad.

Fig. 8-6: AMIBIOS Key-Functions

Automatic AMIBIOS Setup Option Selection

If selecting a certain setting for a specific AMIBIOS Setup option that determines the settings for one or more other AMIBIOS Setup options, AMIBIOS automatically assigns the dependent settings and does not permit the end user to modify these settings unless the setting for the parent option is changed.

For example, the Serial Port options in Peripheral Setup can be set to *2F8h, 3F8h, 2E8h,* or *3E8h.* If *2F8h* is chosen by the end user for Serial Port 1, AMIBIOS disables *2F8h* for Serial Port 2. Invalid options are greyed and cannot be selected.

AMIBIOS Setup Main Menu

The AMIBIOS Setup main menu is organised into four windows. Each window corresponds to a section in this chapter. Each section contains several icons. Clicking on each icon activates a specific function. The AMIBIOS Setup icons and functions are described in this chapter. The sections are:

Windows	Function
Setup	The setup window has six icons that permit you to set system configuration options such as date, time, hard disk type, floppy disk type, and many others.
Utilities	The utility window has one icon that performs system functions.
Security	The security window has three icons that control AMIBIOS security features.
Default	The default window has three icons that permit you to select a group of settings for all AMIBIOS Setup options.

Fig. 8-7: AMIBIOS Setup Main Menu

Default Settings

Each AMIBIOS Setup Option has two default settings. These settings can be applied to all AMIBIOS Setup Options when you select the Default window on the AMIBIOS Setup main menu. The types of defaults are:

Optimal: These settings provide the optimal performance characteristics.

Fail-Safe: The Power-On default settings consist of the most basic set of parameters. They are to be used as a reference in case the system is behaving erratically. They should always work, but do not provide optimal system performance characteristics. The system BIOS automatically loads these values, if the system parameters in the CMOS Memory is lost (ex. after shipping the CPU board with disconnected battery).

Setup Types

AMIBIOS Setup have six separate windows. Different types of system configuration parameters are set on each window.

Type	Description
Standard Setup	Set the time and date. Configure disk drives.
Advanced Setup	Configure basic system performance parameters.
Chipset Setup	Configure features specific to the onboard chipset.
Power Management Setup	Configure power conservation features.
PCI/PnP Setup	Configure PCI and Plug-and-Play features.
INSIDE utilities	Configure I/O support.

Fig. 8-8: Setup Types

Standard Setup	
Pri Master	*See Primary Master Hard Disk*
Pri Slave	Not Installed
Sec Master	Not Installed
Sec Slave	Not Installed
Time / Date	*Adjust current date and time*
Floppy A	1.44 MB 3½
Floppy B	Not Installed

Fig. 8-9: Standard Setup

Primary Master Hard Disk	
Type	Auto
LBA / Large Mode	On
Block Mode	On
32 Bit Mode	On
PIO Mode	Auto

Fig. 8-10: Primary Master Hard Disk

Advanced Setup	
Quick Boot	Disabled
1st Boot Device	Floppy
2nd Boot Device	IDE-0
3rd Boot Device	CDROM
Try Other Boot Devices	No
PCMCIA ATA-HD support	Disabled
Display Mode at Add-On ROM Init	Force BIOS
Floppy Acces Control	Read-Write
Hard Disk Acces Control	Read-Write
S.M.A.R.T. for Hard Disks	Enabled
BootUp Num-Lock	On
PS/2 Mouse Support	Enabled
Primary Display	VGA/EGA
Password Check	Setup
Parity Check	Disabled
Boot To OS/2	No
Wait For "F1" If Error	Disabled
Internal Cache	WriteBack
External Cache	Disabled
Cachebility above 64 Mb	Disabled
C800, 16k Shadow	Disabled
CC00, 16k Shadow	Disabled
D000, 16k Shadow	Disabled
D400, 16k Shadow	Disabled
D800, 16k Shadow	Disabled
DC00, 16k Shadow	Disabled

Fig. 8-11: Advanced Setup

Chipset Setup	
USB Function	Disabled
USB Keyboard/Mouse Legacy Support	Disabled
USB Passive Release Enable	Enabled
Global Triton2 Enable	Enabled
Memory Hole	Disabled
8Bit I/O Recovery Time (Sysclk)	1
16Bit I/O Recovery Time (Sysclk)	1
DRAM Timings	70 ns
Refresh Rate	66MHz
Turbo Read LeadOff	Disabled
Read Burst Timing	X333
Write Burst Timing	X333
Fast RAS to CAS Delay (Clocks)	3
LeadOff Timing	7 / 6 / 3 / 4
Turbo Read Pipelining	Disabled
Speculative LeadOff	Disabled
Turn-Around Insertion	Disabled
Memory Address Drive Strength	8ma / 8ma
TypeF DMA Buffer Control1	Disabled
TypeF DMA Buffer Control2	Disabled
NA Disable (NAD) for Ext Cache	Enabled
Peer Concurrency	Enabled
DRAM Data Integrity Mode	Parity
PCI 2.1 Passive Release Enable	Disabled
Delayed Transaction Enable	Disabled
North Bridge Retry Enable	Enabled

Fig. 8-12: Chipset Setup

Power Management Setup	
Power Management / APM	Disabled
Instant-On Timeout (Minute)	Disabled
Green PC Monitor Power State	Standby
Video Power Down Mode	Standby
Hard Disk Power Down Mode	Suspend
Hard Disk Time Out (Minute)	Disabled
Standby Time Out (Minute)	1
Suspend Time Out (Minute)	1
Slow Clock Ratio	1 : 8
IRQ3	Ignore
IRQ4	Ignore
IRQ5	Ignore
IRQ7	Ignore

IRQ8	Ignore
IRQ9	Ignore
IRQ10	Ignore
IRQ11	Ignore
IRQ12	Both
IRQ13	Ignore
IRQ14	Monitor
IRQ15	Monitor

Fig. 8-13: Power Management Setup

PCI / PnP Setup	
Plug and Play Aware O/S	No
PCI Latency timer (PCI Clocks)	64
PCI VGA Palette Snoop	Disabled
PCI IDE BusMaster	Disabled
OffBoard PCI IDE Slot	Auto
OffBoard PCI IDE Primary IRQ	Disabled
OffBoard PCI IDE Secondary IRQ	Disabled
DMA Channel 0	PnP
DMA Channel 1	PnP
DMA Channel 3	PnP
DMA Channel 5	PnP
DMA Channel 6	PnP
DMA Channel 7	PnP
IRQ3	PCI / PnP
IRQ4	PCI / PnP
IRQ5	PCI / PnP
IRQ7	PCI / PnP
IRQ9	PCI / PnP
IRQ10	ISA / EISA
IRQ11	PCI / PnP
IRQ14	PCI / PnP
IRQ15	PCI / PnP
Reserved Memory Size	16 k
Reserved Memory Address	D0000

Fig. 8-14: PCI / PnP Setup

Inside utilities	
Processor Clock (INT/EXT)	366/66MHz
Secure CMOS	Disabled
Ethernet controller	On
SCSI controller	Off
VGA controller	On
Display Type	CRT & Panel
Panel driver	05h *(Note 1)*
Panel Interface	5.0 V
JPLCD PIN 5	GP02
Panel link adjustment	16
SSD drive	Off
SSD prepare	Off
OnBoard FDC	Auto
OnBoard Serial Port1	3F8h
Serial Port1 Interface	RS232
Serial Port1 TX CTRL	N/A
OnBoard Serial Port2	2F8h
Serial Port2 Mode	Normal
IR Duplex Mode	N/A
Receiver Polarity	N/A
Transmitter Polarity	N/A
Fast IR Port	N/A
Fast IR DMA	N/A
OnBoard Parallel Port	378h
Parallel Port Mode	Normal
EPP Version	N/A
Parallel Port IRQ	7
Parallel Port DMA Channel	Auto
Onb speaker	On
General Purpose IO 0	Used by FPUM
General Purpose IO 1	Output (high)
General Purpose IO 2	Used by FPUM
General Purpose IO 3	Used by FPUM
General Purpose IO 4	Output (high)
General Purpose IO 5	High Temp
General Purpose IO 6	Output (high)
General Purpose IO 7	Fan overload
Watch Dog Timeout Action	None
Watch Dog Timeout Periode	0.2 S
Inside Interrupt	68h
High Temp limit, Act: 47°C	80

Temperature violation action	CPU Speed
Fan overload limit, Act: 60mA	299
Fan disconnect or overload action	Speaker
OnBoard IDE	Primary

Fig. 8-15: Inside utilities

Note 1: Resolution: 640 x 480
Technology: TFT Color
Manufacture: Toshiba
Code: LTM10C209

Security

Three icons appear in this part of the AMIBIOS Setup screen:

- Supervisor (Password),
- User (Password), and
- Anti-Virus.

Two Levels of Passwords

Both the Supervisor and the User icons configure password support. If you use both, the Supervisor password must be set first.

The system can be configured so that all users must enter a password every time the system boots or when AMIBIOS Setup is executed, using either or both the Supervisor password or User password.

AMIBIOS Password Support

The Supervisor and User icons activate two different levels of password security.

If AMIBIOS Setup has an optional password feature. The system can be configured so that all users must enter a password every time the system boots or when AMIBIOS Setup is executed.

Setting a Password

The password check option is enabled in Advanced Setup by choosing either *Always* (the password prompt appears every time the system is powered on) or *Setup* (the password prompt appears only when AMIBIOS is run). The password is encrypted and stored in CMOS memory.

You are prompted for a 1 – 6 character password. You can either type the password on the keyboard or select each letter of the password, one at a time, using the mouse. The password does not appear on the screen when typed. Make sure you write it down. If you forget it, you must drain CMOS memory and reconfigure.

Note: If You Do Not Want to Use a Password Press <Enter> when the password prompt appears.

Changing a Password

Select the *Supervisor* or *User* icon from the Security section of the AMIBIOS Setup main menu. Enter the password and press <Enter>. The screen does not display the characters entered. After the new password is entered, retype the new password as prompted and press <Enter>.

If the password confirmation is incorrect, an error message appears. If the new password is entered without error, press <Esc>. The password is stored in CMOS memory after AMIBIOS completes. The next time the system boots, a password prompt appears if the password function is present and enabled.

Remember the Password

Keep a record of the new password when the password is changed. If you forget the password, you must erase the system configuration information in CMOS memory. This can be done by pressing <Del> during boot or taking the battery out for 5 minutes.

Anti-Virus

When this icon is selected from the Security section of the AMIBIOS Setup main menu, AMIBIOS issues a warning when any program (or virus) issues a Disk Format command or attempts to write to the boot sector of the hard disk drive. The settings are *Enabled* or *Disabled.* If enabled, the following appears when a write is attempted to the boot sector. You may have to type *N* several times to prevent the boot sector write.

Boot Sector Write!!!

Possible VIRUS: Continue (Y/N)? _

The following appears after any attempt to format any cylinder, head, or sector of any hard disk drive via the BIOS INT 13 Hard Disk Drive Service:

Format!!!

Possible VIRUS: Continue (Y/N)? _

Default

The icons in this section permit you to select a group of settings for all AMIBIOS Setup options. Not only can you use these icons to quickly set system configuration parameters, you can choose a group of settings that have a better chance of working when the system is having configuration-related problems.

- **Original**
  Choose the Original icon to return to the system configuration values present in AMIBIOS Setup when you first began this AMIBIOS Setup session.
- **Optimal**
  You can load the optimal default settings for the AMIBIOS by selecting the Optimal icon. The Optimal default settings are best-case values that should optimise system performance. If CMOS memory is corrupted, the Optimal settings are loaded automatically.
- **Fail-Safe**
  You can load the Fail-Safe AMIBIOS Setup option settings by selecting the Fail-Safe icon from the Default section of the AMIBIOS Setup main menu.

The Fail-Safe settings provide far from optimal system performance, but are the most stable settings. Use this option as a diagnostic aid if the system is behaving erratically.

AMIBIOS Power-On Self Test

Every time the system is powered on, AMIBIOS executes a power-on self test. In case of errors they are reported in one of two ways. If the error occurs before the display device is initialised, a series of beeps sound. Beep codes indicate that a fatal error has occurred. AMIBIOS Beep Codes are described in the table below.

If it beeps…	**Then...**
1, 2, or 3 times	Re-insert the memory SIMMs. If the system still beeps replace the memory.
6 times	Try a different keyboard or replace the keyboard fuse if the keyboard has one.
8 times	There is an error on the Video adapter or the Video RAM
9 times	The BIOS ROM chip is bad. The system probably needs a new BIOS ROM chip.
11 times	Re-insert the cache memory on the board. If it still beeps, replace the cache memory.
4, 5, 7, or 10 times	Fatal error.

Fig. 8-16: Beep Codes

If the error occurs after the display device is initialised, an error message is displayed.

INSIDE Interrupts

The interrupt number is selected in the ***INSIDE Utilities*** setup menu.

By loading the desired function number in the AL CPU register and generating a software interrupt with the INT X instruction the function is called. X is the interrupt number specified in the Inside utility setup. Some of the functions will require an additional value loaded in the AH register.

8.4 Installation of the Memory Module

1. The memory module is inserted to the mount (look to the figure below)
   To do this incline the module on 45°.
2. Tilt the module carefully on the mount to behind until it snap into position.

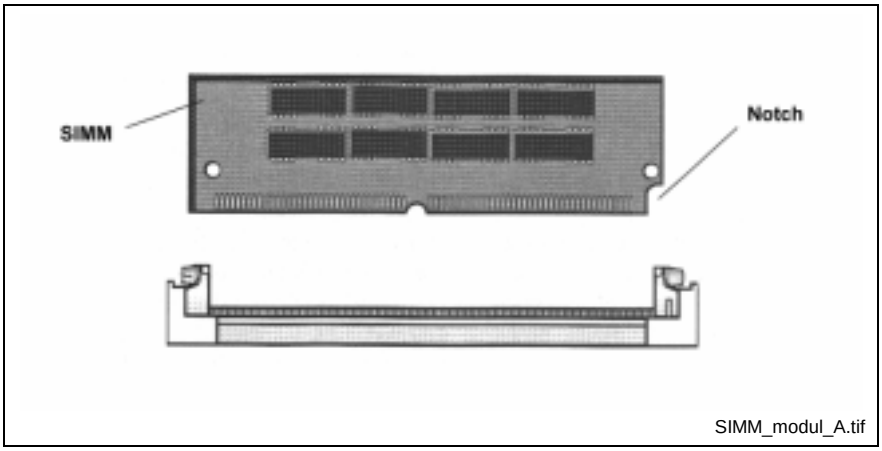

Fig. 8-17: Installation of a SIMM Module Figure A

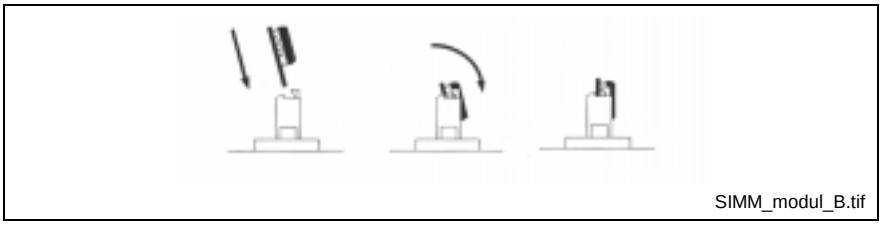

Fig. 8-18: Installation of a SIMM Module Figure B

9 Ethernet Card PCM-E02.1

9.1 General

The PCM-E02.1 can connect the BTV20 to a 10 MBit/s Ethernet or a 100 MBit/s Fast Ethernet network.

The RJ-45 port adjusts in addiction of the speed of the hub or switch automatically to a 10 MBit/s- or a 100 MBit/s connection.

Note: With the AUI and BNC port are only 10 MBits/s-connections possible.

In the following figure the positions of the media connections and the LEDs of the Ethernet card are represented.

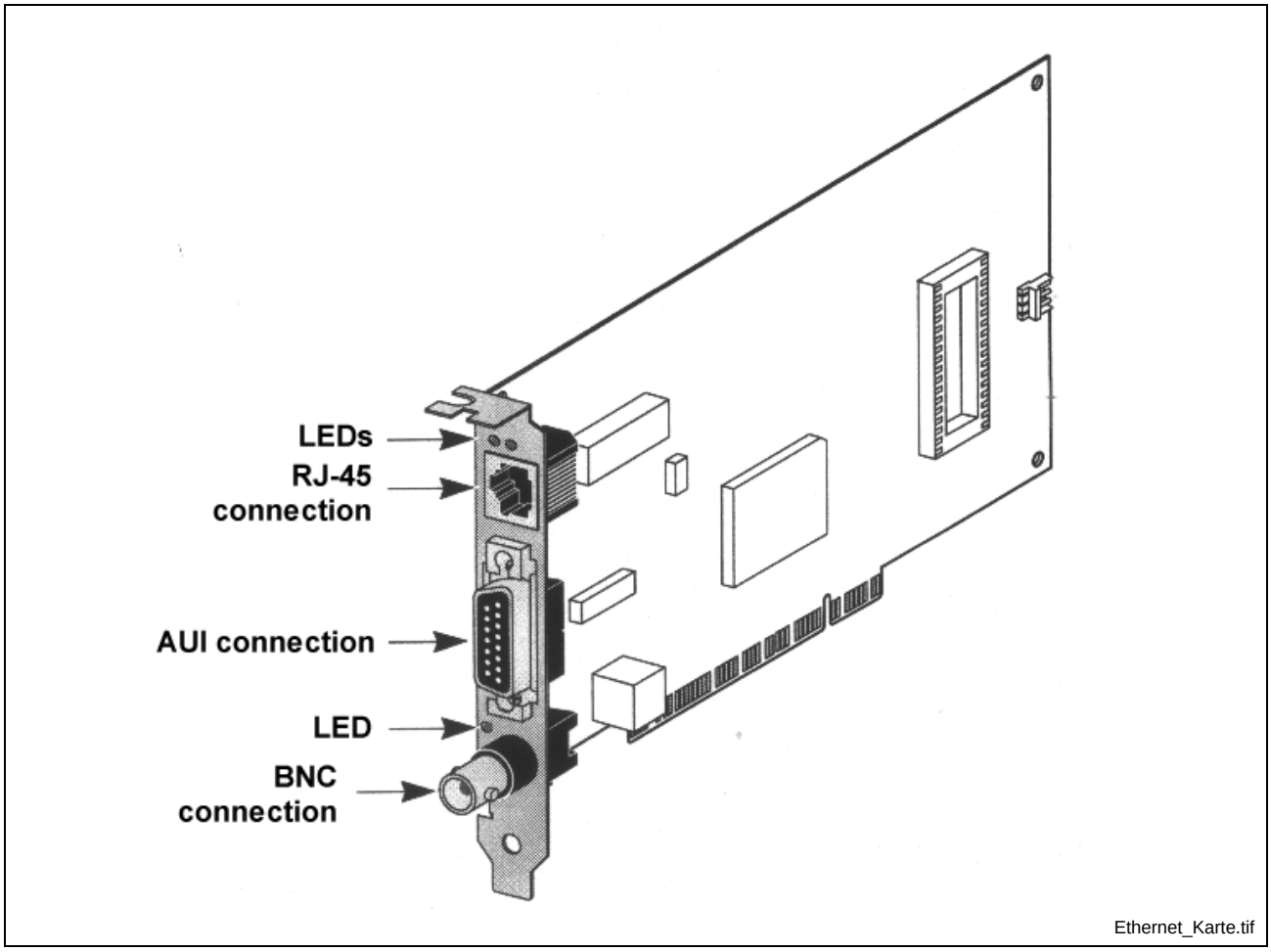

Fig. 9-1: Media connections of the Ethernet card

Pin assignments

RJ45 port

Pin	Signal name
1	TxD +
3	RxD +
5	N.C.
7	N.C.

Pin	Signal name
2	TxD -
4	N.C.
6	RxD -
8	N.C.

Fig. 9-2: Pin assignment of the RJ45-port

AUI port

Pin	Signal name
1	Collision shield
2	Collision +
3	Transmit +
4	Receive shield
5	Receive +
6	Power return
7	n. c.
8	n. c.

Pin	Signal name
9	Collision -
10	Transmit -
11	Transmit shield
12	Receive -
13	+ 12 V
14	Voltage shield
15	n. c.

Fig. 9-3: Pin assignment of the AUI port

BNC-Port

The BNC-Port is planned for connection of a 50 ohm coax cable. The connection must take place via a T adapter. To this way the computer can slide into a network line.

Is there an end unit (no second leaving line), it must connect a 50 ohm termination resistance on the free departure.

LED indicator status

The PCM02.1 possess three LEDS. Before the Leds can be used for search for faults of the card must connected to the network and the network drivers must be installed.

LED	Description	blink	On	Off
10 LNK	Green: connection OK	Opposite polarity	Good connection between the card and the network hub or switch respectively	No connection between the card and the network hub or switch respectively
100 LNK	Green: connection OK	Note: On a good connection speed of 100 MBit/s the LED don't blink.	Good connection between the card and the network hub or switch respectively	No connection between the card and the network hub or switch respectively
ACT	Yellow: Data traffic at the connection	Network data traffic available	Strong network data traffic	no network data traffic

Fig. 9-4: LED indicator status

9.2 Technical data

Hardware	
Memory	4 KB internal RAM
Bus interface	PCI Local Bus-Specification, 32-Bit-Bus
PCI-Master	Supported DMAs with Bus-Master-bunch/- dispersion
Dimensions	17,5 x 10 cm (L x W)
Operation voltage	+12 V ± 5% on max. 390 mA +5 V ± 5% on max. 520 mA
Network interface	
10 MBit/s Ethernet 10 Base-T	Ethernet IEEE 802.3-industry standard for one 10 MBit/s-basis band-CSMA/CD-LAN
100 MBit/s Fast Ethernet 100 Base-TX	Fast Ethernet IEEE 802.3 -industry standard for one 100 MBit/s-basis band-CSMA/CD-LAN
Environment conditions	
Operation temperature	0° ... 70° C
Memory temperature	-30° ... 90° C
Operation humidity	10 ... 90 % not condensed
Memory humidity	10 ... 90 % not condensed
Height	-300 ... 3000 m

Fig. 9-5: Technical Data of the PCM-E02

Correspondence with standards

- IEEE 803.3x-stream control
- Microsoft PC98
- PCI 2.1
- DMI 1.0 and 2.0

10 Smart Card Connector (Optional)

10.1 General

The BTV20.3 could optional be equipped with a smart card connector. Find the variants of the type code below.

Type code **10. Disk drive**

10.1 Disk drive 3,5", 1,44 MB mounted . . . . . = D

10.2 Smart card Interface . . . . . .= S

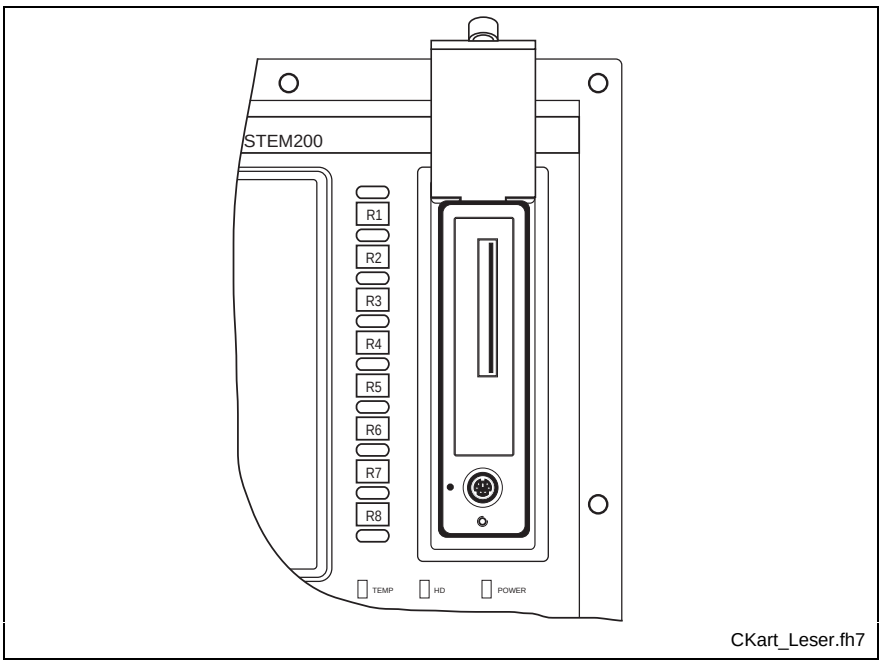

Fig. 10-1: View to the floppy disk flap with assembled smart card connector

10.2 Technical Data

Electrical Characteristics	Standard	Value
Contact resistance incl. 150 mm ribbon cable and male connector	IEC 60512-2, Test 2a	Data contacts ≤ 100 mΩ Switch contacts ≤200 mΩ.
Insulation resistance	IEC 60512-3, Test 3a	≥ 10^9 Ω
High voltage resistance	IEC 60512-2, Test 4a	500 V_{AC}; 1 min
Environmental Conditions		
Climatic category	IEC 60068-1	25 / 85 / 21
Operating temperature		- 25 °C ... + 85°C
Storage temperature		- 25 °C ... + 85°C
Mechanical Characteristics		
Card insertion force	IEC 60512-7, Test 13b	3...5 N
Vibration	IEC 60512-4 Test 6 d	f = 10 ... 60 Hz, 0,5 mm DA f = 60 ... 500 Hz a = 2,5 g 2 h / axis
Shock, without disconnection	IEC 60512-4 Test 6 c	≤ 40 g; 11 ms; halfsine 2 shocks / direction in 3 axis
Shock without destruction	IEC 60512-4 Test 6 c	200 g; 6 ms; halfsine 2 shocks / direction in 3 axis
Contact force		20 ... 50 cN

Fig. 10-2: Technical Data of the Smart card connetor

10.3 Connection of the Smart Card connector

Internal

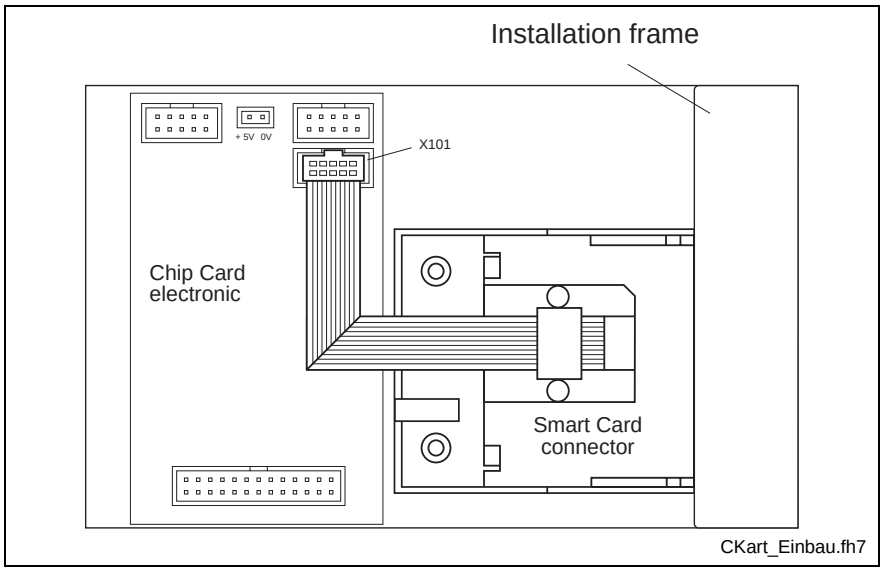

Fig. 10-3: Installation and connection of the Smart Card connector

The total unit of the Smart Card connector is shown in Fig. 10-3. The installation frame includes the reader and the smart card electronic. The connection to the electronic is made by a 10 way flat ribbon cable. This cable is pluged in connector X101.

The power supply of the printed wiring board (circuit board) is made by the PC power supply unit.

External

If a BTV20.3 with smart card connector is delivered, the following slot is added on Slot UE1:

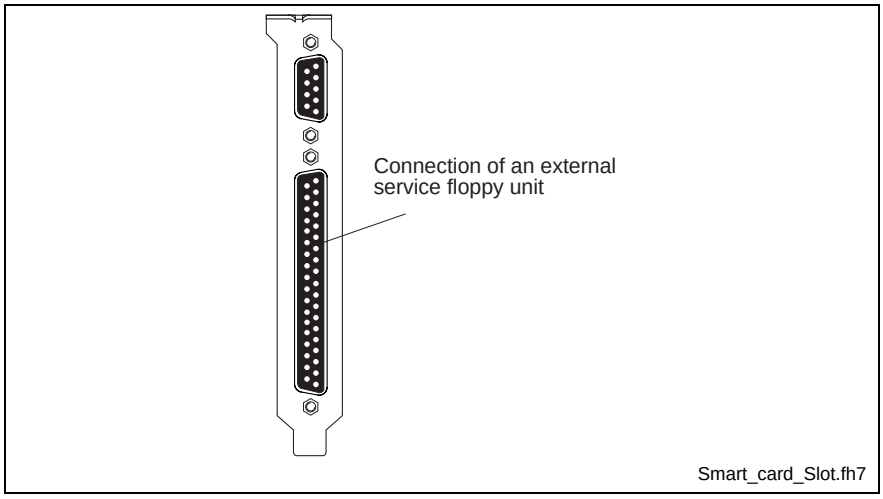

Fig. 10-4: Slot bracket for smart card connector

As shown in Fig. 10-4 a connection of an external floppy unit for service purposes is available. The 9 way D-SUB connector above is connected by a serial cable(IKB0028) with the COM 1 of the Slot CPU.

10.4 Chip Cards

Chip Cards, Smart Cards, IC Cards or whatever application specific term is used have some commonality:

- the outside dimensions, standardized acc. to ISO 7810, the size of a common credit card
- and the position of the contact pads, (which connect the embedded IC chip) are fixed according to ISO 7816.

Note: It is only allowed to use Chip Cards which show the Chip in middle position. (look to Fig. 10-5)

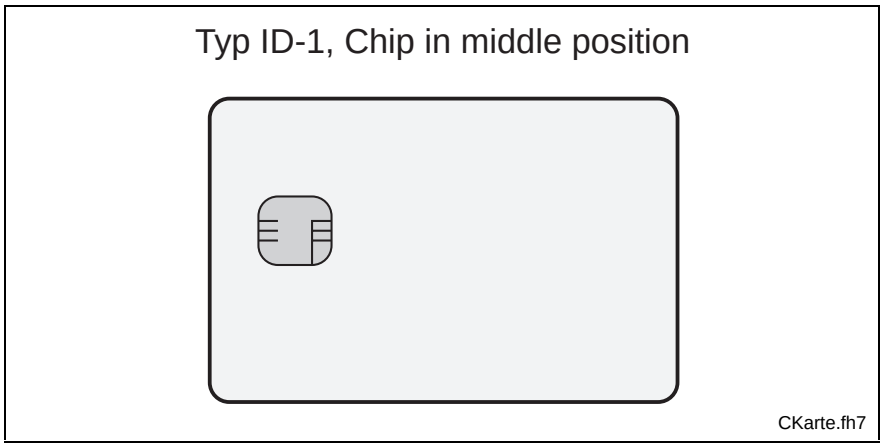

Fig. 10-5: Chip Cards

10.5 Changing the Chip cards

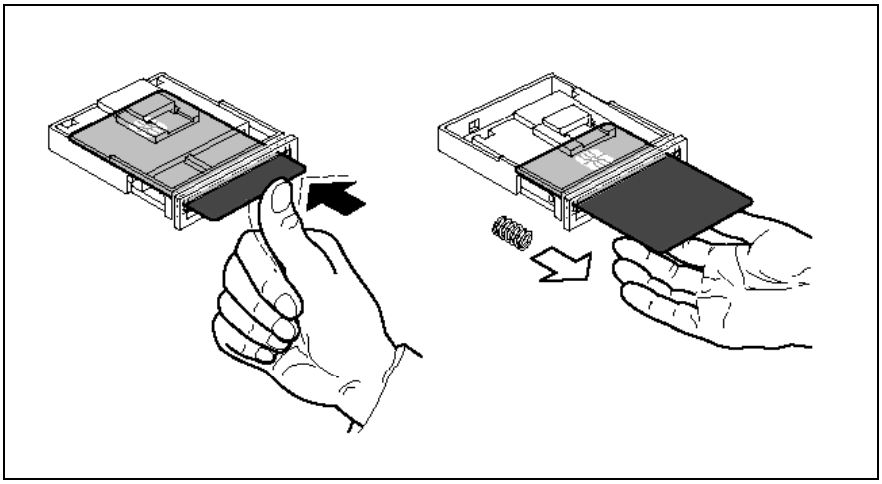

Fig. 10-6: The principle of the Chip Card change

CAUTION

Mechanical damage through a wrong handling!

⇒ The instruction of change is to observe in order to prevent damage.

The Chip card will be insert or cast at the same principle how a pen works.

7. Insert the card till it touches. The chip looks away from the display (as shown in Fig. 10-6).
   The card clicks into place and remains there.
8. To remove the card push again.
   The card is released. A feather will cast the card and you can take it away.

11 Ordering information

11.1 Type code

Abbrev. Column →	1	2	3	4	5	6	7	8	9	10	1	2	3	4	5	6	7	8	9	20	1	2	3	4	5	6	7	8	9	30	1	2	3	4	5	6	7	8	9	40
Example:	B	T	V	2	0	.	3	C	A	-	6	4	B	-	3	3	C	-	D	-	F	W																		

1. Product group
1.1 BTV. . . . . = BTV

2. Line
2.1 20 . . . . . = 20

3. Design
3.1 3 . . . . . = 3

4. Function type
4.1 MTA (export certificate is mandotory) = A
4.2 MTC (export certificate is mandatory)= C
4.3 PC . . . . . = P
4.4 ISP . . . . . = S

5. Keyboard
5.1 standard. . . . . = A

6. Memory capacity (RAM)
6.1 128 MB . . . . . = 28
6.2 64 MB . . . . . = 64

7. Machine function keys
7.1 16 Machine function keys, on both sides right and left . . . . . = B

8. System configuration
8.1 min. 3 GB, min. 300 MHz, RS485 (SIS). . . . . = 33

9. Nominal connecting voltage
9.1 AC 115 to 230 V, 50 to 60 Hz . . . . . = C

10. Disk drive
10.1 Disk drive 3.5", 1.44 MB mounted. . . . . = D
10.2 Smart Card interface. . . . . .= S

11. Firmware
11.1 Denotes that firmware must be ordered as separate subposition. . . . = FW

Type.fh7

Fig. 11-1: Type code BTV20.3

11.2 Configuration Type codes

BTV20.3C

ISA bus
PCI bus
Slot no. U2 U3 U4 U5 U6 U7 U8 U9 U10

Abbrev. column	1	2	3	4	5	6	7	8	9	10	1	2	3	4	5	6	7	8	9	20	1	2	3	4	5	6	7	8	9	30	1	2	3	4	5	6	7	8	9	40
Example:	C	F	G	-	B	T	V	2	0	.	3	C	-	N	N	-	2	T	-	N	N	-	B	B	-	S	4	-	B	1	-	2	D	-	2	C	-	N	N	

1. Object group
1.1 Configuration . . . = CFG

2. Product group
2.1 BTV20.3 . . . . . = BTV20.3

3. Function type
3.1 MTC (export certificate is mandatory) . . . . . = C

4. Other design
4.1 none . . . . . = NN
4.2 power supply DC 12 V for external equipments. . . = PA

5. Slot U3 to U10

	Designation	Bus	Code
MTS-P	Serial interface module (2 x RS232 + 2 x RS422 / 485)	PC104	BB-S4
MTS-P	PROFIBUS-DP master module	PC104	P1
MTS-P	PROFIBUS-DP slave module	PC104	P2
MTS-P	INTERBUS master module	PC104	B1
MTS-P	PLC module (MTS-P01.2-D2), 2 MB-RAM (Master / Slave)	ISA	2D
MTS-P	PLC module (MTS-P02.2-D2), 2 MB-RAM (Master / Slave)	ISA	2F
MTC-P	Axis-processor module, with co-processor	PC104	A2
MTC-P	CNC module (MTC-P01.2-M2) with 8 axes, 2 MB-RAM	ISA	2C
Add. plug-in cards	Ethernet card PCM-E02.1	PCI	2T
Add. plug-in cards	Slot not equipped	-	NN

Allowed slot assignments (see illustration example):

U1 to U2
- slot U1 always equipped with PC module (not mentioned in type code)
- slot U2 see 4. Other design

U3 to U6 (PCI bus)
- first Ethernet card "2T" only in slot U3
- second Ethernet card "2T" only in slot U4
- PC104 module possible (according field 5.), if slot U3 to U6 are not equipped with PCI module

U6 to U10 (ISA bus)
- MTS-P, MTC-P and relevant components are arranged in the order in which they appear in the table (column "Code", i.e. MTS-P / MTC-P)

It applies:
Assembly groups equipped to ISA bus or PCI bus are starting with a number (e.g., 2C).
All other assembly groups equipped to PC104 bus are starting with a letter (e.g., B1).

6. Standard reference

Standard	Title
INN 44.03-01-02	Type code : Control unit, MTC-P01.2
INN 44.10-01-02	Type code : Control unit, MTS-P01.2
INN 44.10-02-02	Type code : Control unit, MTS-P02.2
INN 48.20-20-03	Type code : User terminal, BTV20.3
INN 48.74-02-01	Type code : PC accessories, PCM-E02.1

Cfg_BTV20_3C.FH7

Fig. 11-2: Configuration type code BTV20.3C

BTV20.3S

ISA bus

PCI bus

Slot no. U2 U3 U4 U5 U6 U7 U8 U9 U10

Abbrev. column	1	2	3	4	5	6	7	8	9	10	1	2	3	4	5	6	7	8	9	20	1	2	3	4	5	6	7	8	9	30	1	2	3	4	5	6	7	8	9	40
Example:	C	F	G	-	B	T	V	2	0	.	3	S	-	N	N	-	2	T	-	N	N	-	B	B	-	S	4	-	P	1	-	B	1	-	2	D	-	N	N	

1. Object group
1.1 Configuration . . . = CFG

2. Product group
2.1 BTV20.3 . . . . . = BTV20.3

3. Function type
3.1 ISP . . . . . = S

4. Other design
4.1 none . . . . . = NN
4.2 power supply DC 12 V for external equipments. . . = PA

5. Slot U3 to U10

	Designation	Bus	Code
MTS-P	Serial interface module (2 x RS232 + 2 x RS422 / 485)	PC104	BB-S4
MTS-P	PROFIBUS-DP master module	PC104	P1
MTS-P	PROFIBUS-DP slave module	PC104	P2
MTS-P	INTERBUS master module	PC104	B1
MTS-P	PLC module (MTS-P01.2-D2), 2 MB-RAM (Master / Slave)	ISA	2D
MTS-P	PLC module (MTS-P02.2-D2), 2 MB-RAM (Master / Slave)	ISA	2F
Add. plug-in cards	Ethernet card PCM-E02.1	PCI	2T
Add. plug-in cards	Slot not equipped	-	NN

Allowed slot assignments (see illustration example):

U1 to U2
- slot U1 always equipped with PC module (not mentioned in type code)
- slot U2 see 4. Other design

U3 to U6 (PCI bus)
- first Ethernet card "2T" only in slot U3
- second Ethernet card "2T" only in slot U4
- PC104 module possible (according field 5.), if slot U3 to U6 are not equipped with PCI module

U6 to U10 (ISA bus)
- MTS-P and relevant components are arranged in the order in which they appear in the table (column "Code")

It applies:
Assembly groups equipped to ISA bus or PCI bus are starting with a number (e.g., 2D).
All other assembly groups equipped to PC104 bus are starting with a letter (e.g., B1).

6. Standard reference

Standard	Title
INN 44.10-01-02	Type code : Control unit, MTS-P01.2
INN 44.10-02-02	Type code : Control unit, MTS-P02.2
INN 48.20-20-03	Type code : User terminal, BTV20.3
INN 48.74-02-01	Type code : PC accessories, PCM-E02.1

Cfg_BTV20_3S.FH7

Fig. 11-3: Configuration type code BTV20.3S

BTV20.3A

PC bus — NC bus

Slot no.		U2	U3		U4		U5		U6		U7		U8		U9		U10	
Abbrev. Column →	1 2 3 4	5 6 7 8 9	10 11 12	3 4 5	6	7 8 9	20 21	2	3 4 5	6 7 8	9 30	1	2 3 4	5 6 7	8 9	40
Example:	C F G -	B T V 2 0	. 3 A	- 1 F	-	N N	- B 1	-	2 F -	3 L -	2 L	-	1 L -	1 N -	1 V	

1. Object group
1.1 Configuration. . . = CFG

2. Product group
2.1 BTV20.3. . . . . .= BTV20.3

3. Function type
3.1 MTA (export certificate is mandatory). . . . . = A

4. Slots U3 to U7
4.1

	Designation	Bus	Code
MTS-P	Serial interface module (2 x RS232 + 2 x RS422 / 485)	PC104	BB-S4
MTS-P	PROFIBUS-DP master module	PC104	P1
MTS-P	INTERBUS master module	PC104	B1
MTS-P	PLC module (MTS-P01.2-D2), 2MB-RAM (Master / Slave)	NC	2D
MTS-P	PLC module (MTS-P02.2-D2), 2MB-RAM (Master / Slave)	NC	2F
Add. plug-in cards	Second SERCOS interface module	NC	2L
Add. plug-in cards	Third SERCOS interface module	NC	3L
Add. plug-in cards	Slot not equipped	-	NN

It applies:
Modules arranged in the order in which they appear in the table (column "Code". i.e. MTS-P / add. plug-in card).
Assembly groups equipped to NC / PC bus of BTV20.2 are starting with a number (e.g., 2D).
All other assembly groups equipped to PC104 bus are starting with a letter (e.g., B1).

Allowed slot assignments (see illustration example):

U1 to U2
- U1 always equipped with PC module (not mentioned in type code)
- U2 always equipped with link interface module (MFA) "1F"

U3 to U6
- Serial interface module "BB-S4" occupies two slots
- MTS-P "2D" or "2F" only suitable in slot U6 or U5
  (If more than one SERCOS interface module is used, then note that the MTS-P can be outfitted with a maximum of three or two PC104 modules)
- third SERCOS interface module "3L" only possible in slot U6

U7
- second SERCOS interface module "2L"
- Slot not equipped "NN"

U8 to U10
- U8 always equipped with the first SERCOS interface module "1L"
- U9 always equipped with NC-CPU module "1N"
- U10 always equipped with multi I/O interface module (MIO) "1V"

Cfg_BTV20_3A.EPS

Fig.11-4: Configuration type code BTV20.3A

11.3 Accessories

Connectors and Standard Cables

Order designation of standard cables	Matching connector of unit	INDRAMAT cable	Cable end type
IKB0193/000,0 MN: 282 041 (RS232, max 2m)	INS0525/L01	INK0234	INS0526/L01
	9 pin/male		9 pin/female
IKS0056/000,0 MN: 255 968 (Interbus cable)	INS0525/L01	INK0234	INS0526/L01
	9pin./male		9pin./female
IKS0190/000,0 Standard interface cable Connection BTC06	INS0624/C		INS0631/C
IKB0015/000,0 MN: 282 870 (RS422, max 400m)	INS0645/K01	INK0234	INS0645/K01
	15 pin/male		15-pin/male
IKB0016/000,0 MN: 282 871 (RS422, max 400m)	INS0645/K01	INK0234	INS0526/L01
	15 pin/male		9 pin/female
IKB0028/00,20 MN: 290450 (RS232 0,20 m)	INS0456/L01		INS0457/L01
	9 pin/male		9 pin/female
INS0525/L01 MN: 259 759	INS0525/L01 (9 pin/male)	D-subminiature plug-in connector	

INS0526/L01 MN: 259 762	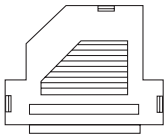 D-subminiature plug-in connector INS0526/L01 (9 pin/male)
INS0619/K01 MN: 279 583	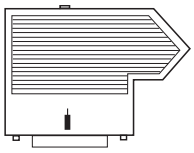 Y-connector for customer connection with termination INS0619/K01 RS485 (15 pin/male)
INS0645/K01 MN: 282 040	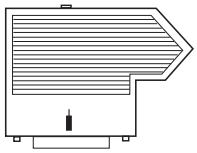 Connector for customization with termination. INS0645/K01 RS422 (15 pin/male)

Fig. 11-5: Connector and cable accessories of the BTV20

Lockable floppy disk flap

The following accessory set can additionally be ordered for the BTV20.3 unit. It permits the unit to be upgraded with a lockable floppy disk flap.

SUP-M01-BTV20

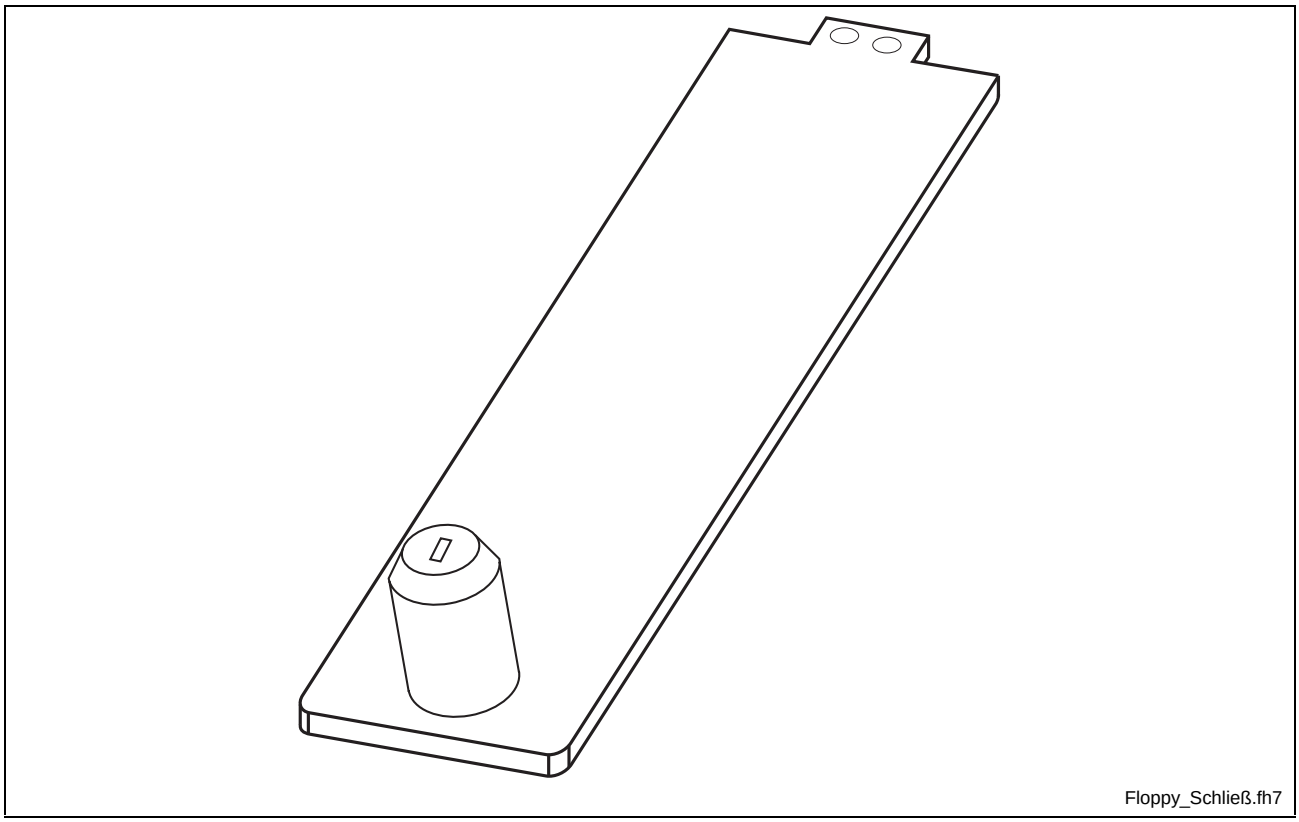

Fig. 11-6: Lockable floppy disk flap SUP-M01-BTV20

12 Included Equipment (upon delivery)

Mounting set

- 10 x tallow-drop screws M5 x 12
- 10 x gaskets M5 Nyltite
- 1 x 3 way cable connector, socket (only with 230V power section)
- Front plate gasket 404 x 4 x 0,8 mm
- Front plate gasket 365 x 4 x 0,8 mm

Designation label set

- Printed slide-in label suggestions
- SWD-HMI*BT-STP-01VRS-MS-C1,44
  Disk with templates for label creation

SWD-BTV20*-UTI-01VRS-MS-C1,44

- Disk with software for keyboard language settings

Folder with software package

- Package of the ordered firmware and software

13 List of Figures

14 Index

I

K

L

M

N

O

P

R

S

T

U

W

X

15 Service & Support

15.1 Helpdesk

Unser Kundendienst-Helpdesk im Hauptwerk Lohr am Main steht Ihnen mit Rat und Tat zur Seite. Sie erreichen uns

- Telefonisch: **+49 (0) 9352 40 50 60**
  über Service-Call Entry Center Mo-Fr 07:00-18:00
- per Fax: **+49 (0) 9352 40 49 41**
- per e-Mail: **service@indramat.de**

Our service helpdesk at our headquarters in Lohr am Main, Germany can assist you in all kinds of inquiries. Contact us

- by phone: **+49 (0) 9352 40 50 60**
  via Service-Call Entry Center Mo-Fr 07:00 am -6:00 pm
- by fax: **+49 (0) 9352 40 49 41**
- by e-mail: **service@indramat.de**

15.2 Service-Hotline

Außerhalb der Helpdesk-Zeiten ist der Service direkt ansprechbar unter

+49 (0) 171 333 88 26
oder **+49 (0) 172 660 04 06**

After helpdesk hours, contact our service department directly at

+49 (0) 171 333 88 26
or **+49 (0) 172 660 04 06**

15.3 Internet

Weitere Hinweise zu Service, Reparatur und Training finden Sie im Internet unter

www.indramat.de

Außerhalb Deutschlands nehmen Sie bitte zuerst Kontakt mit Ihrem lokalen Ansprechpartner auf. Die Adressen sind im Anhang aufgeführt.

Additional notes about service, repairs and training are available on the Internet at

www.indramat.de

Please contact the sales & service offices in your area first. Refer to the addresses on the following pages.

15.4 Vor der Kontaktaufnahme... - Before contacting us...

Wir können Ihnen schnell und effizient helfen wenn Sie folgende Informationen bereithalten:

1. detaillierte Beschreibung der Störung und der Umstände.
2. Angaben auf dem Typenschild der betreffenden Produkte, insbesondere Typenschlüssel und Seriennummern.
3. Tel.-/Faxnummern und e-Mail-Adresse, unter denen Sie für Rückfragen zu erreichen sind.

For quick and efficient help, please have the following information ready:

1. Detailed description of the failure and circumstances.
2. Information on the type plate of the affected products, especially type codes and serial numbers.
3. Your phone/fax numbers and e-mail address, so we can contact you in case of questions.

15.5 Kundenbetreuungsstellen - Sales & Service Facilities

Verkaufsniederlassungen
Niederlassungen mit Kundendienst

sales agencies
offices providing service

Deutschland – Germany

vom Ausland: (0) nach Landeskennziffer weglassen!
from abroad: don't dial (0) after country code!

Vertriebsgebiet Mitte Germany Centre	**SERVICE**	**SERVICE**	**SERVICE**
Rexroth Indramat GmbH Bgm.-Dr.-Nebel-Str. 2 97816 Lohr am Main **Kompetenz-Zentrum Europa** Tel.: +49 (0)9352 40-0 Fax: +49 (0)9352 40-4885	**CALL ENTRY CENTER** **MO – FR** **von 07:00 - 18:00 Uhr** **from 7 am – 6 pm** **Tel. +49 (0) 9352 40 50 60** service@indramat.de	**HOTLINE** **MO – FR** **von 17:00 - 07:00 Uhr** **from 5 pm - 7 am** + SA / SO **Tel.: +49 (0)172 660 04 06** **oder / or** **Tel.: +49 (0)171 333 88 26**	**ERSATZTEILE / SPARES** verlängerte Ansprechzeit - extended office time - ♦ nur an Werktagen - only on working days - ♦ von 07:00 - 18:00 Uhr - from 7 am - 6 pm - **Tel. +49 (0) 9352 40 42 22**
Vertriebsgebiet Süd Germany South	Gebiet Südwest Germany South-West	Vertriebsgebiet Ost Germany East	Vertriebsgebiet Nord Germany North
Rexroth Indramat GmbH Ridlerstraße 75 80339 München Tel.: +49 (0)89 540138-30 Fax: +49 (0)89 540138-10 indramat.mue@t-online.de	Mannesmann Rexroth AG Vertrieb Deutschland – VD-BI Geschäftsbereich Rexroth Indramat Regionalzentrum Südwest Ringstrasse 70 / Postfach 1144 70736 Fellbach / 70701 Fellbach Tel.: +49 (0)711 57 61–100 Fax: +49 (0)711 57 61–125	Rexroth Indramat GmbH Beckerstraße 31 09120 Chemnitz Tel.: +49 (0)371 35 55-0 Fax: +49 (0)371 35 55-333	Mannesmann Rexroth AG Vertriebsniederlassung Region Nord Gesch.ber. Rexroth Indramat Walsroder Str. 93 30853 Langenhagen Tel.: +49 (0) 511 72 66 57-0 Fax: +49 (0) 511 72 66 57-95
Vertriebsgebiet West Germany West	Vertriebsgebiet Mitte Germany Centre	Vertriebsgebiet Ost Germany East	Vertriebsgebiet Nord Germany North
Mannesmann Rexroth AG Vertrieb Deutschland Regionalzentrum West Borsigstrasse 15 40880 Ratingen Tel.: +49 (0)2102 409-0 Fax: +49 (0)2102 409-406	Mannesmann Rexroth AG Gesch.ber. Rexroth Indramat Lilistraße 14-18 63067 Offenbach Tel.: +49 (0) 69 82 00 90-0 Fax: +49 (0) 69 82 00 90-80	Mannesmann Rexroth AG GB Rexroth Indramat GmbH Holzhäuser Str. 122 04299 Leipzig Tel.: +49 (0)341 86 77-0 Fax: +49 (0)341 86 77-219	Rexroth Indramat GmbH Kieler Straße 212 22525 Hamburg Tel.: +49 (0) 40 81 955 966 Fax: +49 (0) 40 85 418 978

Europa – Europe

vom Ausland: (0) nach Landeskennziffer weglassen, Italien: 0 nach Landeskennziffer mitwählen
from abroad: don't dial (0) after country code, Italy: dial 0 after country code

Austria - Österreich Mannesmann Rexroth Ges.m.b.H. Gesch.ber. Rexroth Indramat Hägelingasse 3 1140 Wien Tel.: +43 (0)1 9852540-400 Fax: +43 (0)1 9852540-93	Austria - Österreich Mannesmann Rexroth G.m.b.H. Gesch.ber. Rexroth Indramat Industriepark 18 4061 Pasching Tel.: +43 (0)7221 605-0 Fax: +43 (0)7221 605-21	Belgium - Belgien Mannesmann Rexroth N.V.-S.A. Gesch.ber. Rexroth Indramat Industrielaan 8 1740 Ternat Tel.: +32 (0)2 5830719 Fax: +32 (0)2 5830731 indramat@rexroth.be	Denmark - Dänemark BEC AS Zinkvej 6 8900 Randers Tel.: +45 (0)87 11 90 60 Fax: +45 (0)87 11 90 61
Czech Republic - Tschechien Mannesmann-Rexroth, spol.s.r.o. Hviezdoslavova 5 627 00 Brno Tel.: +420 (0)5 48 126 358 Fax: +420 (0)5 48 126 112	England Mannesmann Rexroth Ltd. Rexroth Indramat Division Broadway Lane, South Cerney Cirencester, Glos GL7 5UH Tel.: +44 (0)1285 863000 Fax: +44 (0)1285 863030	Finland - Finnland Rexroth Mecman Oy Rexroth Indramat division Ansatie 6 017 40 Vantaa Tel.: +358 (0)9 84 91-11 Fax: +358 (0)9 84 91-13 60	France - Frankreich Mannesmann Rexroth S.A. Division Rexroth Indramat Parc des Barbanniers 4, Place du Village 92632 Gennevilliers Cedex Tel.: +33 (0)141 47 54 30 Fax: +33 (0)147 94 69 41 Hotline: +33 (0)608 33 43 28
France - Frankreich Mannesmann Rexroth S.A. Division Rexroth Indramat 270, Avenue de Lardenne 31100 Toulouse Tel.: +33 (0)5 61 49 95 19 Fax: +33 (0)5 61 31 00 41	France - Frankreich Mannesmann Rexroth S.A. Division Rexroth Indramat 91, Bd. Irène Joliot-Curie 69634 Vénissieux – Cedex Tel.: +33 (0)4 78 78 53 65 Fax: +33 (0)4 78 78 53 62	Hungary - Ungarn Mannesmann Rexroth Kft. Angol utca 34 1149 Budapest Tel.: +36 (1) 364 00 02 Fax: +36 (1) 383 19 80	Italy - Italien Mannesmann Rexroth S.p.A. Divisione Rexroth Indramat Via G. Di Vittoria, 1 20063 Cernusco S/N.MI Tel.: +39 02 2 365 270 Fax: +39 02 700 408 252378
Italy - Italien Mannesmann Rexroth S.p.A. Divisione Rexroth Indramat Via Borgomanero, 11 10145 Torino Tel.: +39 011 7 50 38 11 Fax: +39 011 7 71 01 90	Italy - Italien Mannesmann Rexroth S.p.A. Divisione Rexroth Indramat Via del Progresso, 16 (Zona Ind.) 35020 Padova Tel.: +39 049 8 70 13 70 Fax: +39 049 8 70 13 77	Italy - Italien Mannesmann Rexroth S.p.A. Divisione Rexroth Indramat Via Mascia, 1 80053 Castellamare di Stabia NA Tel.: +39 081 8 71 57 00 Fax: +39 081 8 71 68 85	Italy - Italien Mannesmann Rexroth S.p.A. Divisione Rexroth Indramat Viale Oriani, 38/A 40137 Bologna Tel.: +39 051 34 14 14 Fax: +39 051 34 14 22
Netherlands - Niederlande/Holland Rexroth B.V. Kruisbroeksestraat 1 (P.O. Box 32) 5281 RV Boxtel Tel.: +31 (0)411 65 19 51 Fax: +31 (0)411 65 14 83 indramat@hydraudyne.nl	Netherlands - Niederlande/Holland Rexroth Hydrocare B.V. Kruisbroeksestraat 1 (P.O. Box 32) 5281 RV Boxtel Tel.: +31 (0)411 65 19 51 Fax: +31 (0)411 67 78 14	Norway - Norwegen Rexroth Mecman AS Rexroth Indramat Division Berghagan 1 or: Box 3007 1405 Ski-Langhus 1402 Ski Tel.: +47 (0)64 86 41 00 Fax: +47 (0)64 86 90 62	Poland - Polen Mannesmann Rexroth Sp.zo.o. Biuro Poznan ul. Dabrowskiego 81/85 60-529 Poznan Tel.: +48 061 847 67 99 Fax: +48 061 847 64 02
Rumania - Rumänien Mannesmann Rexroth Sp.zo.o. Str. Drobety nr. 4-10, app. 14 70258 Bucuresti, Sector 2 Tel.: +40 (0)1 210 48 25 +40 (0)1 210 29 50 Fax: +40 (0)1 210 29 52	Russia - Russland Mannesmann Rexroth INDRAMAT Wolokolamskoje Chaussee 73 Zimmer 406, 408 RUS – 123424 Moskau Tel.: +7 095/ 232 08 34 +7 095/ 232 08 35 Fax: +7 095/ 232 08 36 info.rex@rexroth.ru	Spain - Spanien Mannesmann Rexroth S.A. Divisiòn Rexroth Indramat Centro Industrial Santiga Obradors s/n 08130 Santa Perpetua de Mogoda Barcelona Tel.: +34 9 37 47 94 00 Fax: +34 9 37 47 94 01	Spain - Spanien Goimendi S.A. División Rexroth Indramat Parque Empresarial Zuatzu C/ Francisco Montagne no.2 20018 San Sebastian Tel.: +34 9 43 31 84 21 - service: +34 9 43 31 84 56 Fax: +34 9 43 31 84 27 - service: +34 9 43 31 84 60 satindramat-goimendi@adegi.es
Sweden - Schweden Rexroth Mecman Svenska AB Rexroth Indramat Division Varuvägen 7 125 81 Stockholm Tel.: +46 (0)8 727 92 00 Fax: +46 (0)8 647 32 77	Slowenia - Slowenien DOMEL elektromotorji in gospodinjski aparati d.d. Otoki 21 4228 Zelezniki Tel.: +386 4 51 17 100 Fax: +386 4 51 17 225	Switzerland East - Schweiz Ost Mannesmann Rexroth Schweiz AG Gesch.ber. Rexroth Indramat Gewerbestraße 3 8500 Frauenfeld Tel.: +41 (0)52 720 21 00 Fax: +41 (0)52 720 21 11	Switzerland West - Schweiz West Mannesmann Rexroth Suisse SA Département Rexroth Indramat Rue du village 1 1020 Renens Tel.: +41 (0)21 632 84 20 Fax: +41 (0)21 632 84 21
Turkey - Türkei Mannesmann Rexroth Hidropar A..S. Fevzi Cakmak Cad No. 3 34630 Sefaköy Istanbul Tel.: +90 212 541 60 70 Fax: +90 212 599 34 07			

Africa, Asia, Australia – incl. Pacific Rim

vom Ausland: (x) nach Landeskennziffer weglassen!
from abroad: don't dial (x) after country code!

Australia - Australien AIMS - Australian Industrial Machinery Services Pty. Ltd. Unit 3/45 Horne ST Campbellfield , VIC 3061 Melbourne Tel.: +61 (0)3 93 59 02 28 Fax: +61 (0)3 93 59 02 86	Australia - Australien Mannesmann Rexroth Pty. Ltd. No. 7, Endeavour Way Braeside Victoria, 31 95 Melbourne Tel.: +61 (0)3 95 80 39 33 Fax: +61 (0)3 95 80 17 33 mel@rexroth.com.au	China Shanghai Mannesmann Rexroth Hydraulics & Automation Ltd. Wai Gaoqiao Free Trade Zone No.122, Fu Te Dong Yi Road Shanghai 200131 - P.R.China Tel.: +86 21 58 66 30 30 Fax: +86 21 58 66 55 23	China Mannesmann Rexroth (China) Ldt. 15/F China World Trade Center 1, Jianguomenwai Avenue Beijing 100004, P.R.China Tel.: +86 10 65 05 03 80 Fax: +86 10 65 05 03 79
China Mannesmann Rexroth (China) Ldt. A-5F., 123 Lian Shan Street Sha He Kou District Dalian 116 023, P.R.China Tel.: +86 411 46 78 930 Fax: +86 411 46 78 932	China Mannesmann Rexroth (China) Ldt. Guangzhou Repres. Office Room 1014-1016, Metro Plaza, Tian He District, 183 Tian He Bei Rd Guangzhou 510075, P.R.China Tel.: +86 20 8755-0030 +86 20 8755-0011 Fax: +86 20 8755-2387	Hongkong Rexroth (China) Ldt. 1/F., 19 Cheung Shun Street Cheung Sha Wan, Kowloon, Hongkong Tel.: +852 22 62 51 00 Fax: +852 27 41 33 44	India - Indien Mannesmann Rexroth (India) Ltd. Rexroth Indramat Division Plot. A-58, TTC Industrial Area Thane Turbhe Midc Road Mahape Village Navi Mumbai - 400 701 Tel.: +91 (0)22 7 61 46 22 Fax: +91 (0)22 7 68 15 31
India - Indien Mannesmann Rexroth (India) Ltd. Rexroth Indramat Division Plot. 96, Phase III Peenya Industrial Area Bangalore - 560058 Tel.: +91 (0)80 8 39 73 74 Fax: +91 (0)80 8 39 43 45	Indonesia - Indonesien PT. Rexroth Wijayakusuma Jl. Raya Bekasi Km 21 Pulogadung Jakarta Timur 13920 Tel.: +62 21 4 61 04 87 +62 21 4 61 04 88 Fax: +62 21 4 60 01 52	Japan Rexroth Automation Co., Ltd. Service Center Japan Yutakagaoka 1810, Meito-ku, NAGOYA 465-0035, Japan Tel.: +81 (0)52 777 88 41 +81 (0)52 777 88 53 +81 (0)52 777 88 79 Fax: +81 (0)52 777 89 01	Japan Rexroth Automation Co., Ltd. Rexroth Indramat Division 1F, I.R. Building Nakamachidai 4-26-44, Tsuzuki-ku YOKOHAMA 224-0041, Japan Tel.: +81 (0)45 942 72 10 Fax: +81 (0)45 942 03 41
Korea Mannesmann Rexroth-Korea Ltd. Rexroth Indramat Division 1500-12 Dadae-Dong- Saha-Ku Pusan, 604-050 Republic of South Korea Tel.: +82 (0)51 26 00 741 Fax: +82 (0)51 26 00 747 gyhan@rexrothkorea.co.kr	Malaysia Mannesmann Rexroth SDN.BHD. Head Office No. 3, Block B, Jalan SS 13/5 Subang Jaya Industrial Estate 47500 Petaling Jaya - Selangor Tel.: +60 (0) 3 73 44 870 Fax: +60 (0) 3 73 44 864	South Africa - Südafrika TECTRA Automation (Pty) Ltd. 28 Banfield Road,Industria North RSA - Maraisburg 1700 Tel.: +27 (0)11 673 20 80 Fax: +27 (0)11 673 72 69	Taiwan Rexroth Uchida Co., Ltd. No.17, Lane 136, Cheng Bei 1 Rd., Yungkang, Tainan Hsien Taiwan, R.O.C. Tel.: +886 (0)6 25 36 565 Fax: +886 (0)6 25 34 754
Thailand NC Advance Technologies Co. Ltd. 59/76 Moo 9 Soi Ramintra 34 Ramintra Road, Tharang, Bangkhen Bangkok 10220 Tel.: +66 2 943 70 62 +66 2 943 71 21 Fax: +66 2 509 23 62 sonkawin@hotmail.com			

Nordamerika – North America

USA Hauptniederlassung - Headquarters	USA Central Region - Mitte	USA Southeast Region - Südwest	USA SERVICE-HOTLINE
Mannesmann Rexroth Corporation Rexroth Indramat Division 5150 Prairie Stone Parkway Hoffman Estates, IL 60192-3707 **Competence Centre America** Tel.: +1 847 6 45 36 00 Fax: +1 847 6 45 62 01 service@indramat.com	Mannesmann Rexroth Corporation Rexroth Indramat Division Central Region Technical Center Auburn Hills, MI 48326 Tel.: +1 248 3 93 33 30 Fax: +1 248 3 93 29 06	Mannesmann Rexroth Corporation Rexroth Indramat Division Southeastern Technical Center 3625 Swiftwater Park Drive Suwanee, Georgia 30174 Tel.: +1 770 9 32 32 00 Fax: +1 770 9 32 19 03	- 7 days x 24hrs - **+1-800-860-1055**
USA Northeast Region – Nordost	USA Northeast Region – Nordost	Canada East - Kanada Ost	Canada West - Kanada West
Mannesmann Rexroth Corporation Rexroth Indramat Division Charlotte Regional Sales Office 14001 South Lakes Drive Charlotte, North Carolina 28273 Tel.: +1 704 5 83 97 62 +1 704 5 83 14 86	Mannesmann Rexroth Corporation Rexroth Indramat Division Northeastern Technical Center 99 Rainbow Road East Granby, Connecticut 06026 Tel.: +1 860 8 44 83 77 Fax: +1 860 8 44 85 95	Basic Technologies Corporation Burlington Division 3426 Mainway Drive Burlington, Ontario Canada L7M 1A8 Tel.: +1 905 335 55 11 Fax: +1 905 335-41 84	Basic Automation Burnaby 5345 Goring St. Burnaby, British Columbia Canada V7J 1R1 Tel. +1 604 205-5777 Fax +1 604 205-6944 dave.gunby@basic.ca

Südamerika – South America

Argentina - Argentinien	Argentina - Argentinien	Brazil - Brasilien	Brazil - Brasilien
Mannesmann Rexroth S.A.I.C. Division Rexroth Indramat Acassusso 48 41/7 RA - 1605 Munro (Buenos Aires) Tel.: +54 (0)11 4756 01 40 Fax: +54 (0)11 4762 6862 mannesmann@mannesmannsaic.com.ar	NAKASE Servicio Tecnico CNC Calle 49, No. 5764/66 RA - 1653 Villa Balester Prov. - Buenos Aires Tel.: +54 (0) 11 4768 36 43 Fax: +54 (0) 11 4768 24 13 nakase@usa.net nakase@infovia.com.ar	Mannesmann Rexroth Automação Ltda. Divisão Rexroth Indramat Rua Georg Rexroth, 609 Vila Padre Anchieta BR - 09951-270 Diadema-SP [Caixa Postal 377] [BR-09901-970 Diadema-SP] Tel.: +55 (0)11 4075 90 60 +55 (0)11 4075 90 70 Fax: +55 (0)11 4075 90 50 alexandre.wittwer@rexroth.com.br	Mannesmann Rexroth Automação Ltda. Divisão Rexroth Indramat R. Dr.Humberto Pinheiro Vieira, 100 Distrito Industrial BR - 89220-390 Joinville - SC [Caixa Postal 1273] Tel./Fax: +55 (0)47 473 58 33 Mobil: +55 (0)47 974 66 45 prochnow@zaz.com.br
Mexico			
Mannesmann Rexroth Mexico S.A. de C.V. Calle Neptuno 72 Unidad Ind. Vallejo MEX - 07700 Mexico, D.F. Tel.: +52 5 754 17 11 +52 5 754 36 84 +52 5 754 12 60 Fax: +52 5 754 50 73 +52 5 752 59 43			

Notizen - Notes

288587

Printed in Germany

Rexroth Indramat